elna

explore the art

# ELNA 745 - 845 PARTS LIST

# INDEX


| | |
|---|---|
| FRONT COVER | 1 – 1A |
| REAR / SIDE COVERS / SPOOL STAND / ANTENNA | 2 |
| BASE PLATE / FRONT DOOR | 3 – 3A |
| THREAD TENSION / TENSION RELAESE | 4 – 4A |
| SAFETY DEVICE SYSTEM / ACCESSORY STAND | 5 – 5A |
| MOTOR / FOOT CONTROL / CORDS | 6 |
| CASING | 7 – 7A |
| PRESSER BAR / NEEDLE BAR / NEEDLE PLATE | 8 – 8A |
| UPPER LOOPER / LOWER LOOPER / CHAIN LOOPER | 9 |
| FRONT AND REAR FEED DOG / FEED ASEMBLING SYSTEM | 10 |
| HANDWHEEL / MOTOR BELT / MAINSHAFT | 11 |
| CUTTING SYSTEM / MOVING AND FIXED BLADES | 12 |
| ACCESSORYS / INSTRUCTION BOOK | 13 |

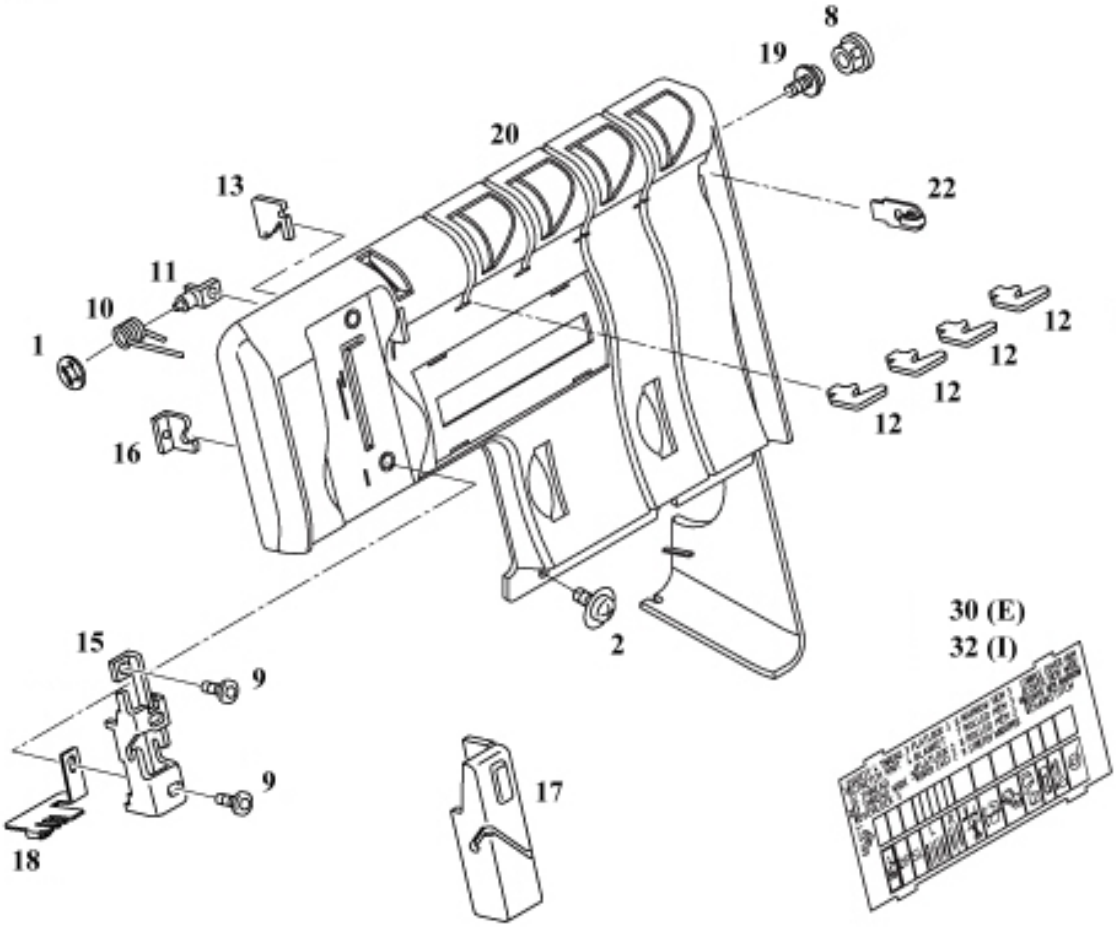
8
19
20
22
13
11
10
1
12
12
12
12
16
2
30 (E)
32 (I)
15
9
9
17
18

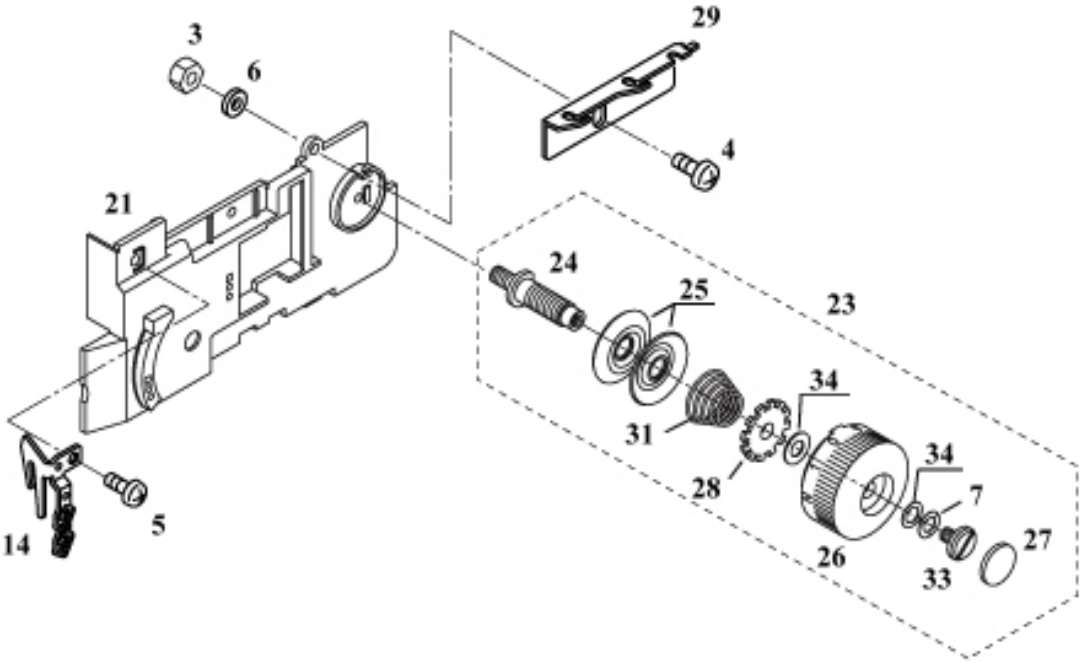
3
6
29
4
21
24
25
23
34
31
34
28
7
5
14
26
33
27

# 1

| N° | N° EIC | Description |
|---|---|---|
| 1 | 396012-66 | Clip ring #4 |
| 2 | 395049-19 | Screw - TPM4x10 |
| 3 | 395052-15 | Nut M4 |
| 4 | 395052-57 | Screw M4x10 |
| 5 | 395003-07 | Screw M4x12 |
| 6 | 396008-47 | Washer 4x8x0.8 |
| 7 | 396013-05 | Washer 5x10x0.16 |
| 8 | 396010-72 | Cap φ8 white |
| 9 | 396013-01 | M4x12 Cap screw |
| 10 | 396016-33 | Check spring |
| 11 | 396016-34 | Check spring stud |
| 12 | 396016-41 | Upper thread guide |
| 13 | 396016-45 | CS thread base guide |
| 14 | 396016-54 | Thread guide |
| 15 | 396016-57 | Take-up lever inside cover bracket |
| 16 | 396016-60 | Needle thread guide |
| 17 | 396016-65 | Take-up lever noise cover assem. |
| 18 | 396019-26 | Needle thread guide |
| 19 | 396026-10 | Screw TPM 4x6 |
| 20 | 396029-86 | Front panel |
| 21 | 396029-98 | Inside cover |
| 22 | 306032-15 | CS top thread guide (brown) |
| 23 | 396032-31 | Chainstitch dial tension assembled |
| 24 | 396032-32 | Tension stud |
| 25 | 396032-33 | Dial tension disc |
| 26 | 396032-34 | Tension dial (brown) |
| 27 | 396032-35 | Tension dial sticker |
| 28 | 396032-36 | Tension adjustment plate screw |
| 29 | 396032-40 | Thread guide pate |
| 30 | 396032-47 | Program display window, English |
| 31 | 396032-63 | DT spring |
| 32 | 396032-64 | Program display window, Italy |
| 33 | 395128-09 | Screw TPM4x8 |
| 34 | 395128-19 | Washer DT |

# 1A 845

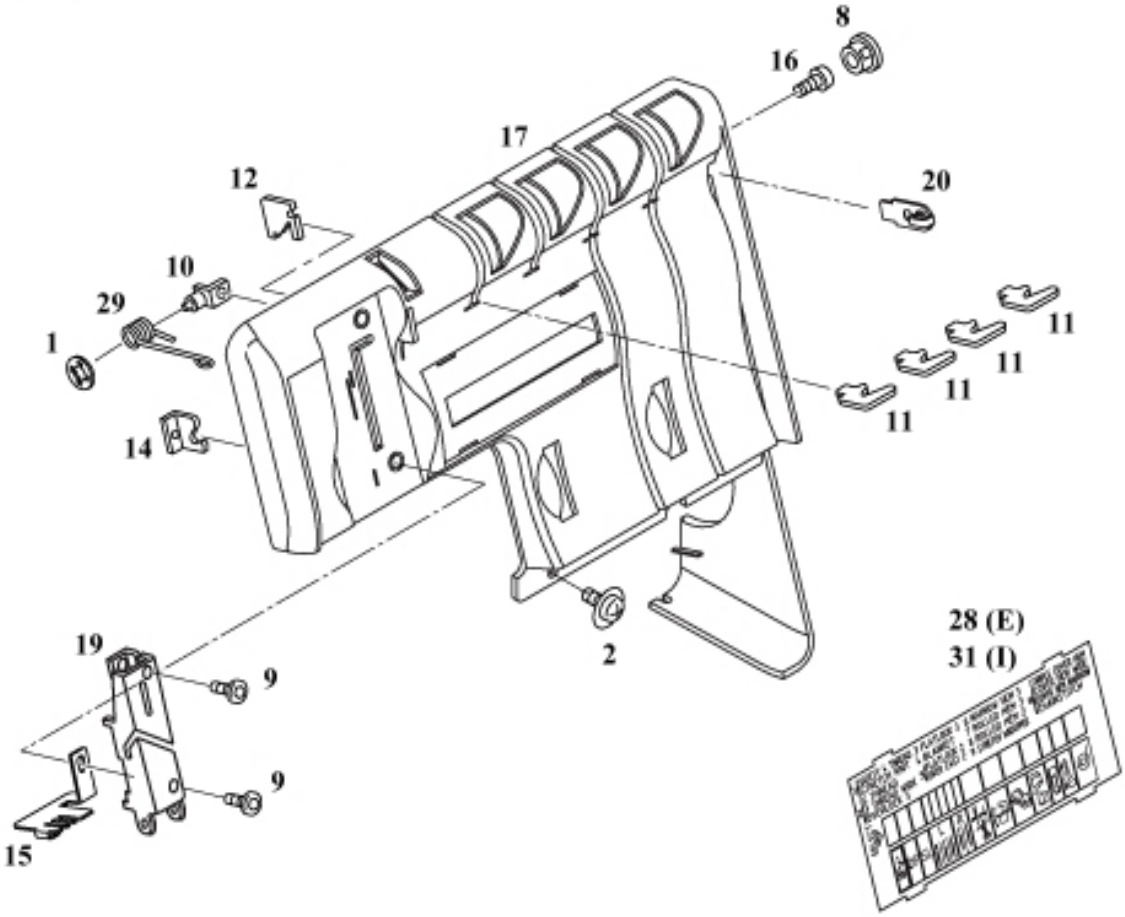
8
16
17
12
20
10
29
1
11
11
11
11
14
2
28 (E)
31 (I)
19
9
9
15

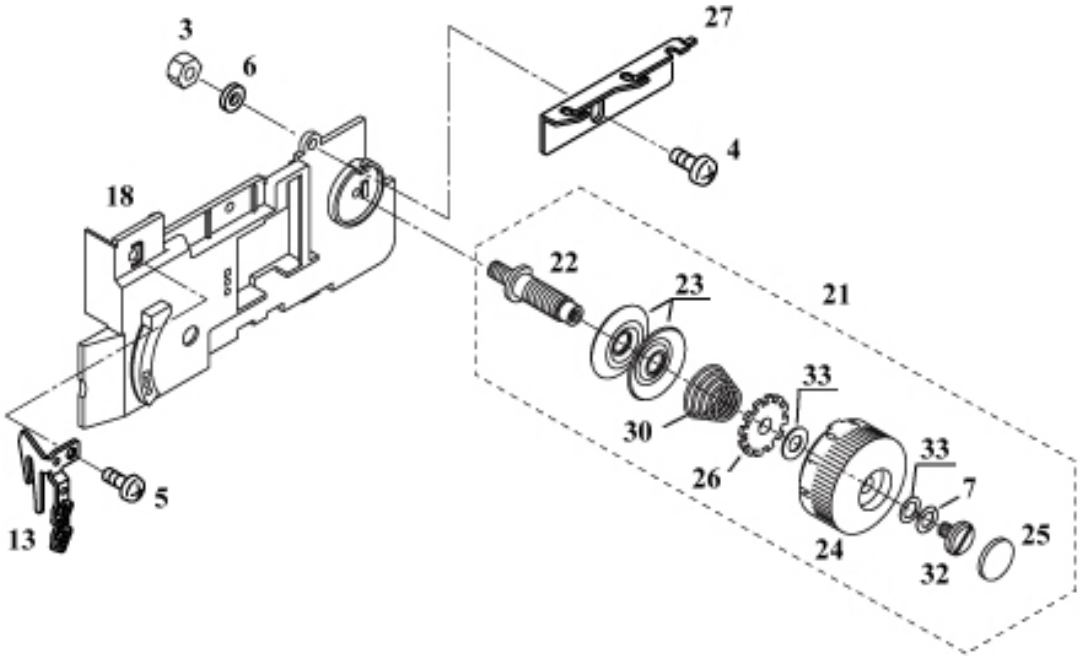
3
6
27
4
18
22
23
21
33
30
33
26
7
5
13
24
32
25

# 1A

| N° | N° EIC | Description |
|---|---|---|
| 1 | 396012-66 | Clip ring #4 |
| 2 | 395049-19 | Screw - TPM4x10 |
| 3 | 395052-15 | Nut M4 |
| 4 | 395052-57 | Screw M4x10 |
| 5 | 395003-07 | Screw M4x12 |
| 6 | 396008-47 | Washer 4x8x0.8 |
| 7 | 396013-05 | Washer 5x10x0.16 |
| 8 | 396010-72 | Cap φ8 white |
| 9 | 396013-01 | M4x12 Cap screw |
| 10 | 396016-34 | Check spring stud |
| 11 | 396016-41 | Upper thread guide |
| 12 | 396016-45 | CS thread base guide |
| 13 | 396016-54 | Thread guide |
| 14 | 396016-60 | Needle thread guide |
| 15 | 396019-26 | Needle thread guide |
| 16 | 396026-10 | Screw TPM 4x6 |
| 17 | 396029-86 | Front panel |
| 18 | 396029-98 | Inside cover |
| 19 | 396032-85 | Take-up lever noise cover |
| 20 | 306032-15 | CS top thread guide (brown) |
| 21 | 396032-31 | Chainstitch dial tension assembled |
| 22 | 396032-32 | Tension stud |
| 23 | 396032-33 | Dial tension disc |
| 24 | 396032-34 | Tension dial (brown) |
| 25 | 396032-35 | Tension dial sticker |
| 26 | 396032-36 | Tension adjustment plate screw |
| 27 | 396032-40 | Thread guide pate |
| 28 | 396032-47 | Program display window, English |
| 29 | 396032-90 | Check spring |
| 30 | 396032-63 | DT spring |
| 31 | 396032-64 | Program display window, Italy |
| 32 | 395128-09 | Screw TPM4x8 |
| 33 | 395128-19 | Washer DT |

# 2 745/845

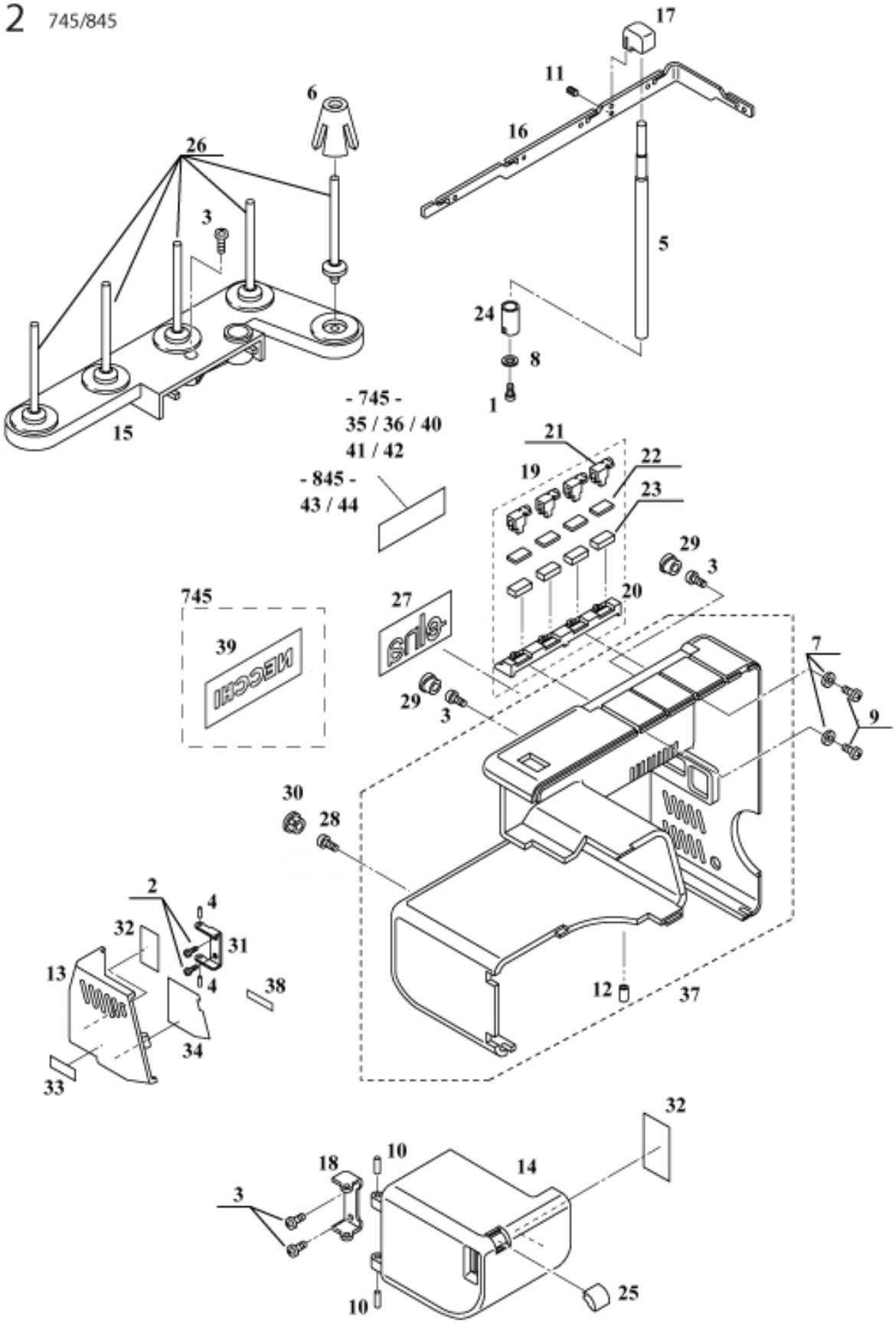
17
11
16
6
26
3
5
24
8
1
15
- 745 -
35 / 36 / 40
41 / 42
- 845 -
43 / 44
21
22
19
23
29
3
20
745
27
39
7
29
3
9
30
28
2
4
32
31
13
4
38
12
37
34
33
32
18
10
14
3
10
25

# 2

| N° | N° EIC | Description |
|---|---|---|
| 1 | 395049-19 | Screw - TPM4x10 |
| 2 | 395052-37 | Screw M4x6 |
| 3 | 395052-57 | Screw M4x10 |
| 4 | 396003-16 | Roll pin 3x12 |
| 5 | 396015-44 | Thread guide pole |
| 6 | 396002-10 | Spool holder |
| 7 | 396007-98 | Washer 3x8x0.5 |
| 8 | 396008-32 | Toothed lock washer 4φ |
| 9 | 396011-39 | Tapping screw M3x8.5 |
| 10 | 396011-49 | Parallel pin 3x10 |
| 11 | 396011-57 | Grub screw M3x8 |
| 12 | 396029-53 | Screw SP M4x7.4 |
| 13 | 396015-45 | Lamp cover |
| 14 | 396015-46 | Left front cover |
| 15 | 396015-47 | Spool stand |
| 16 | 396015-48 | Thread guide beam, type 3, SUS |
| 17 | 396015-49 | Pole/beam joint |
| 18 | 396015-50 | Left front cover hinge |
| 19 | 396015-51 | Top thread guide set |
| 20 | 396015-52 | Top thread guide base |
| 21 | 396015-53 | Top thread guide plate |
| 22 | 396015-54 | "Top thread guide, button" |
| 23 | 396015-55 | "Top thread guide, cushion" |
| 24 | 396015-56 | Antenna support rod |
| 25 | 396015-57 | Cutting width dial window |
| 26 | 396015-61 | "Spool pin, snap-on" |
| 27 | 396015-62 | "Elna" mark for back cover |
| 28 | 396014-19 | Screw M4x16 pan head |
| 29 | 396015-64 | Screw hall cap M8 |
| 30 | 396015-65 | Screw hall cap M9 |
| 31 | 396015-66 | Lamp cover hinge |
| 32 | 396028-88 | Face cover caution label (UL/CUL) |
| 33 | 396019-36 | Lamp mark |
| 34 | 396019-37 | Reflex plate |
| 35 | 396019-49 | Serial number plate (120V) |
| 36 | 396019-50 | Serial number plate (230V) |
| 37 | 396019-58 | Back cover |
| 38 | 396029-59 | Rating sticker 230V15W |
| 39 | 396026-12 | NECCHI mark for back cover |
| 40 | 396029-81 | Serial number plate for "Necchi" |
| 41 | 396032-37 | Serial number plate for Australia |
| 42 | 396032-38 | Serial number plate for South Africa |
| 43 | 396032-92 | Serial number plate (120V) |
| 44 | 396032-93 | Serial number plate (230V) |

# 3 745

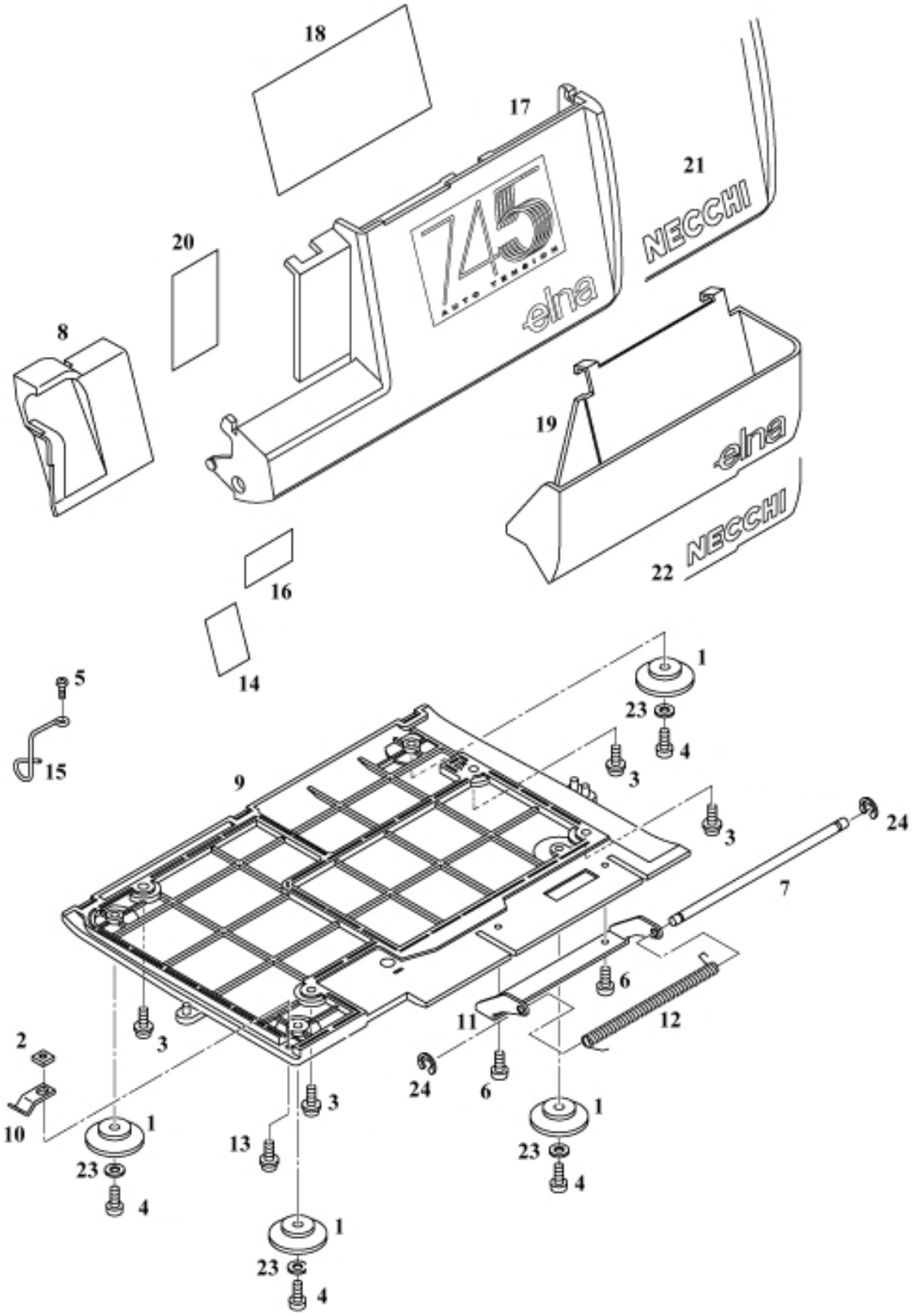
18
17
21
20
8
745
AUTO TENSION
elna
NECCHI
19
elna
NECCHI
22
16
14
5
15
1
23
4
3
9
3
24
7
6
11
12
2
3
24
6
10
1
13
3
1
23
4
23
4
1
23
4

# 3

| N° | N° EIC | Description |
|---|---|---|
| 1 | 396003-40 | Rubber foot |
| 2 | 396007-42 | Spring stopper plate |
| 3 | 396007-80 | Screw TPM4x12 |
| 4 | 396007-81 | Tapping screw M3x12 |
| 5 | 396011-84 | Tapping screw M4x8 S |
| 6 | 396012-17 | Tapping screw M4x10 PC |
| 7 | 396012-84 | Front flap hinge axle |
| 8 | 396015-16 | Overlock sewing table |
| 9 | 396015-17 | Base cover |
| 10 | 396015-19 | Spring stopper plate |
| 11 | 396015-20 | Front flap hinge |
| 12 | 396015-28 | Front flap hinge axle spring |
| 13 | 396015-30 | TP screw M3x10 |
| 14 | 396029-57 | Safety notice cautoin label (UL/CUL) |
| 15 | 396026-04 | Cord holder |
| 16 | 396029-60 | Safety Notice sticker for front cover |
| 17 | 396032-39 | Front flap |
| 18 | 396032-48 | Threading chart 745 |
| 19 | 396032-49 | Waste tray |
| 20 | 396032-62 | CS threading chart |
| 21 | 396032-65 | Front flap, Necchi |
| 22 | 396032-66 | Waste tray, Necchi |
| 23 | 396032-68 | Washer 4x10x0.8 |
| 24 | 395464-00 | Snap ring #3 |

# 3A 845

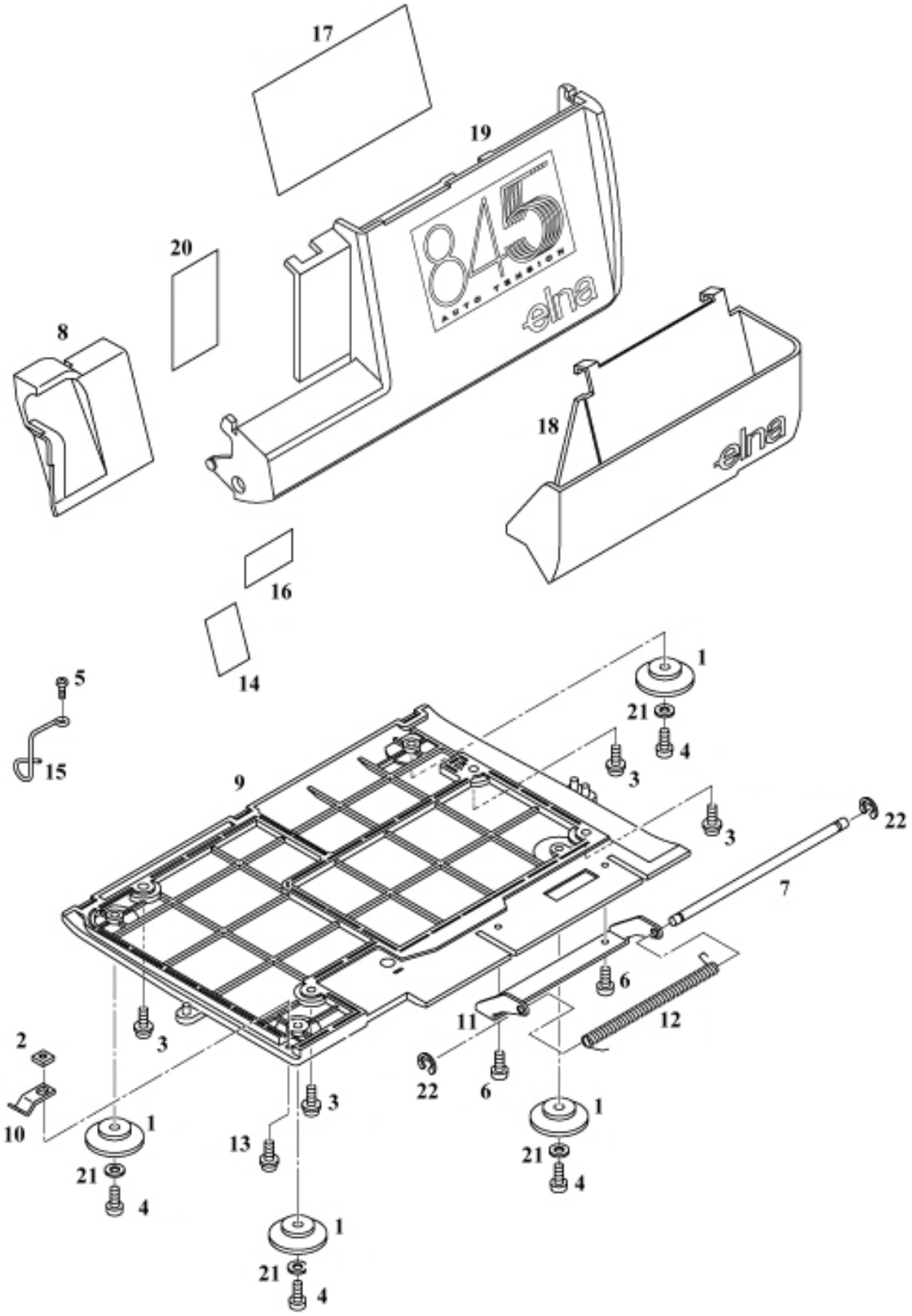
17
19
20
8
845
AUTO TENSION
elna
18
elna
16
14
5
15
9
1
21
4
3
3
22
7
6
12
11
22
6
2
10
3
1
21
4
13
3
1
21
4
1
21
4

# 3A

| N° | N° EIC | Description |
|---|---|---|
| 1 | 396003-40 | Rubber foot |
| 2 | 396007-42 | Spring stopper plate |
| 3 | 396007-80 | Screw TPM4x12 |
| 4 | 396007-81 | Tapping screw M3x12 |
| 5 | 396011-84 | Tapping screw M4x8 S |
| 6 | 396012-17 | Tapping screw M4x10 PC |
| 7 | 396012-84 | Front flap hinge axle |
| 8 | 396015-16 | Overlock sewing table |
| 9 | 396015-17 | Base cover |
| 10 | 396015-19 | Spring stopper plate |
| 11 | 396015-20 | Front flap hinge |
| 12 | 396015-28 | Front flap hinge axle spring |
| 13 | 396015-30 | TP screw M3x10 |
| 14 | 396029-57 | Safety notice cautoin label (UL/CUL) |
| 15 | 396026-04 | Cord holder |
| 16 | 396029-60 | Safety Notice sticker for front cover |
| 17 | 396032-48 | Threading chart 745 |
| 18 | 396032-49 | Waste tray |
| 19 | 396032-91 | Front  flap, 845 |
| 20 | 396032-97 | Top cover threading chart |
| 21 | 396032-68 | Washer 4x10x0.8 |
| 22 | 395464-00 | Snap ring #3 |

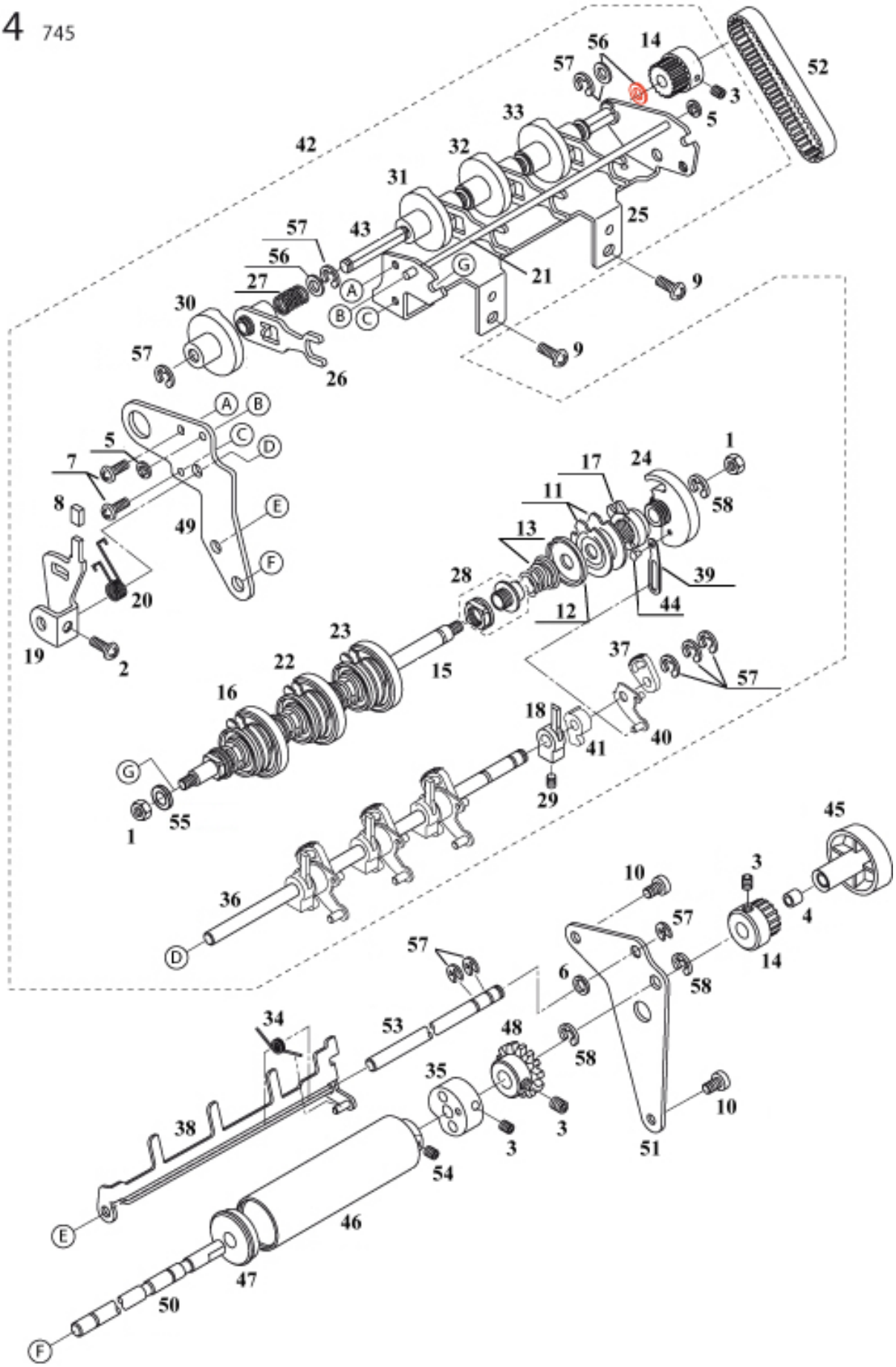
42
56
14
57
52
3
33
5
32
31
25
57
43
56
27
21
9
30
9
57
26
A
B
C
D
E
F
G
5
7
8
49
20
19
2
1
17
24
58
11
13
39
28
12
44
23
22
16
15
37
57
18
41
40
29
G
1
55
45
36
D
10
3
4
57
14
6
58
34
53
48
58
35
10
38
3
3
51
54
E
46
47
50
F

# 4

| N° | N° EIC | Description |
|---|---|---|
| 1 | 395052-15 | Nut M4 |
| 2 | 395052-18 | Screw M4x8 |
| 3 | 395053-63 | Grub screw M4x4 |
| 4 | 395054-50 | Knob spring |
| 5 | 396014-86 | #3 CS Nut |
| 6 | 396029-52 | Washer 5x10x0.25 |
| 7 | 396008-21 | Screw M3x5 |
| 8 | 396010-74 | Tension release lever tip |
| 9 | 396011-48 | Tapping screw M4x10S |
| 10 | 396011-84 | Tapping screw M4x8 S |
| 11 | 396014-94 | Dial tension disc |
| 12 | 396014-95 | Tension spring plate |
| 13 | 396014-87 | Tension spring 1.0 - long |
| 14 | 396019-79 | DT flywheel |
| 15 | 396019-82 | Tension shaft |
| 16 | 396019-83 | Tension knob, blue |
| 17 | 396019-84 | Adj. tension nut |
| 18 | 396019-78 | Tension release crank |
| 19 | 396019-79 | Tension release lever |
| 20 | 396026-00 | Tension release leer spring |
| 21 | 396026-01 | DT suport axle |
| 22 | 396026-07 | Tension knob, red |
| 23 | 396026-08 | Tension knob, yellow |
| 24 | 396026-09 | Tension knob, green |
| 25 | 396029-62 | Tension unit support |
| 26 | 396029-63 | Tension cam lever |
| 27 | 396029-64 | Tension cam spring |
| 28 | 396029-65 | DT screw set |
| 29 | 396029-71 | Grub screw M3x6 |
| 30 | 396029-82 | Dial tension cam, blue |
| 31 | 396029-83 | Dial tension cam, red |
| 32 | 396029-84 | Dial tension cam, yellow |
| 33 | 396029-85 | Dial tension cam, green |
| 34 | 396029-89 | DT release spring |
| 35 | 396032-07 | Upper looper shifting cam |
| 36 | 396032-11 | Fine tuning lever axle |
| 37 | 396032-16 | DT adjustment gear |
| 38 | 396032-17 | DT release plate lever |
| 39 | 396032-18 | DT adjustment rod |
| 40 | 396032-19 | DT adjustment plate |
| 41 | 396032-20 | DT adjustment lever |
| 42 | 396032-22 | DT set, completedly assembled |
| 43 | 396032-23 | DT cam axle |
| 44 | 396032-26 | Round head rivet 2x4 |
| 45 | 396032-29 | Program selection dial |
| 46 | 396032-41 | Program display roller |
| 47 | 396032-42 | Program display roller cap |
| 48 | 396032-43 | DT ratchet |
| 49 | 396032-44 | Tension unit support plate, left |
| 50 | 396032-45 | Tension knob fiting axis |

| | | |
|---|---|---|
| 51 | 396032-46 | Tension unit side support plate, right |
| 52 | 396032-55 | PX201P3M6 Belt |
| 53 | 396032-56 | DT release plate shaft |
| 54 | 395421-00 | Grub screw M4x5 |
| 55 | 396032-99 | Washer 4x8x0.5 |
| 56 | 395462-00 | Polyslider thrust washer 9.5x6.2x0.5 |
| 57 | 395465-00 | Snap ring #4 |
| 58 | 395466-00 | Snap ring #5 |

# 4A 845

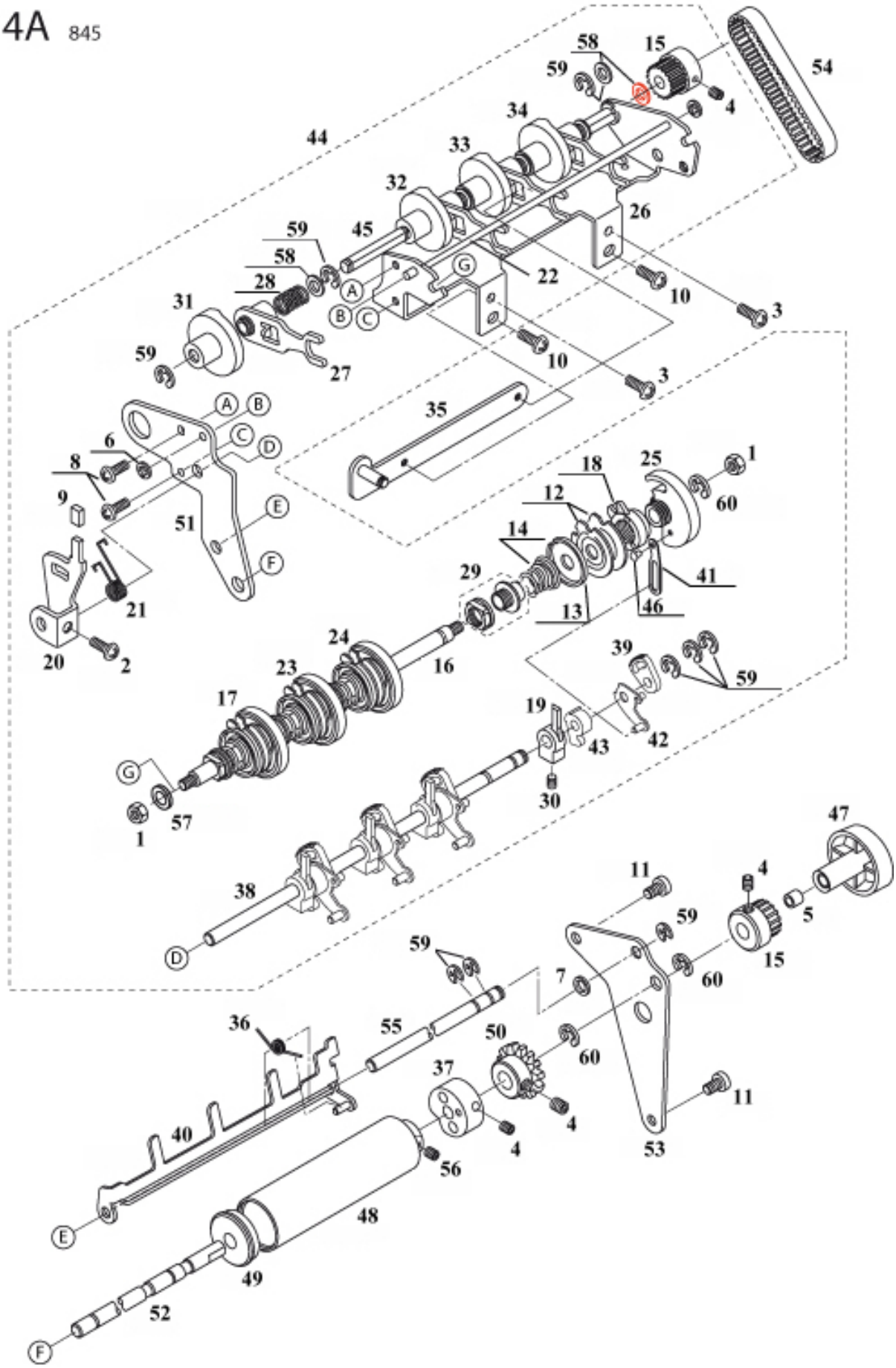
58
15
54
59
4
34
44
33
32
26
59
45
58
22
28
10
31
3
59
27
10
3
35
6
8
9
51
18
25
1
12
60
14
41
29
13
46
21
20
2
24
16
39
59
23
17
19
43
42
30
57
1
47
11
4
38
59
5
15
59
7
60
36
55
50
60
37
11
40
4
4
53
56
48
49
52

# 4A

| N° | N° EIC | Description |
|---|---|---|
| 1 | 395052-15 | Nut M4 |
| 2 | 395052-18 | Screw M4x8 |
| 3 | 395052-37 | Screw M4x6 |
| 4 | 395053-63 | Grub screw M4x4 |
| 5 | 395054-50 | Knob spring |
| 6 | 396014-86 | #3 CS Nut |
| 7 | 396029-52 | Washer 5x10x0.25 |
| 8 | 396008-21 | Screw M3x5 |
| 9 | 396010-74 | Tension release lever tip |
| 10 | 396011-48 | Tapping screw M4x10S |
| 11 | 396011-84 | Tapping screw M4x8 S |
| 12 | 396014-94 | Dial tension disc |
| 13 | 396014-95 | Tension spring plate |
| 14 | 396014-87 | Tension spring 1.0 - long |
| 15 | 396019-79 | DT flywheel |
| 16 | 396019-82 | Tension shaft |
| 17 | 396019-83 | Tension knob, blue |
| 18 | 396019-84 | Adj. tension nut |
| 19 | 396019-78 | Tension release crank |
| 20 | 396019-79 | Tension release lever |
| 21 | 396026-00 | Tension release leer spring |
| 22 | 396026-01 | DT suport axle |
| 23 | 396026-07 | Tension knob, red |
| 24 | 396026-08 | Tension knob, yellow |
| 25 | 396026-09 | Tension knob, green |
| 26 | 396029-62 | Tension unit support |
| 27 | 396029-63 | Tension cam lever |
| 28 | 396029-64 | Tension cam spring |
| 29 | 396029-65 | DT screw set |
| 30 | 396029-71 | Grub screw M3x6 |
| 31 | 396029-82 | Dial tension cam, blue |
| 32 | 396029-83 | Dial tension cam, red |
| 33 | 396029-84 | Dial tension cam, yellow |
| 34 | 396029-85 | Dial tension cam, green |
| 35 | 396032-73 | Arm support |
| 36 | 396029-89 | DT release spring |
| 37 | 396032-07 | Upper looper shifting cam |
| 38 | 396032-11 | Fine tuning lever axle |
| 39 | 396032-16 | DT adjustment gear |
| 40 | 396032-17 | DT release plate lever |
| 41 | 396032-18 | DT adjustment rod |
| 42 | 396032-19 | DT adjustment plate |
| 43 | 396032-20 | DT adjustment lever |
| 44 | 396032-22 | DT set, completedly assembled |
| 45 | 396032-23 | DT cam axle |
| 46 | 396032-26 | Round head rivet 2x4 |
| 47 | 396032-29 | Program selection dial |
| 48 | 396032-41 | Program display roller |
| 49 | 396032-42 | Program display roller cap |
| 50 | 396032-43 | DT ratchet |

| | | |
|---|---|---|
| 51 | 396032-44 | Tension unit support plate, left |
| 52 | 396032-45 | Tension knob fiting axis |
| 53 | 396032-46 | Tension unit side support plate, right |
| 54 | 396032-55 | PX201P3M6 Belt |
| 55 | 396032-56 | DT release plate shaft |
| 56 | 395421-00 | Grub screw M4x5 |
| 57 | 396032-99 | Washer 4x8x0.5 |
| 58 | 395462-00 | Polyslider thrust washer 9.5x6.2x0.5 |
| 59 | 395465-00 | Snap ring #4 |
| 60 | 395466-00 | Snap ring #5 |

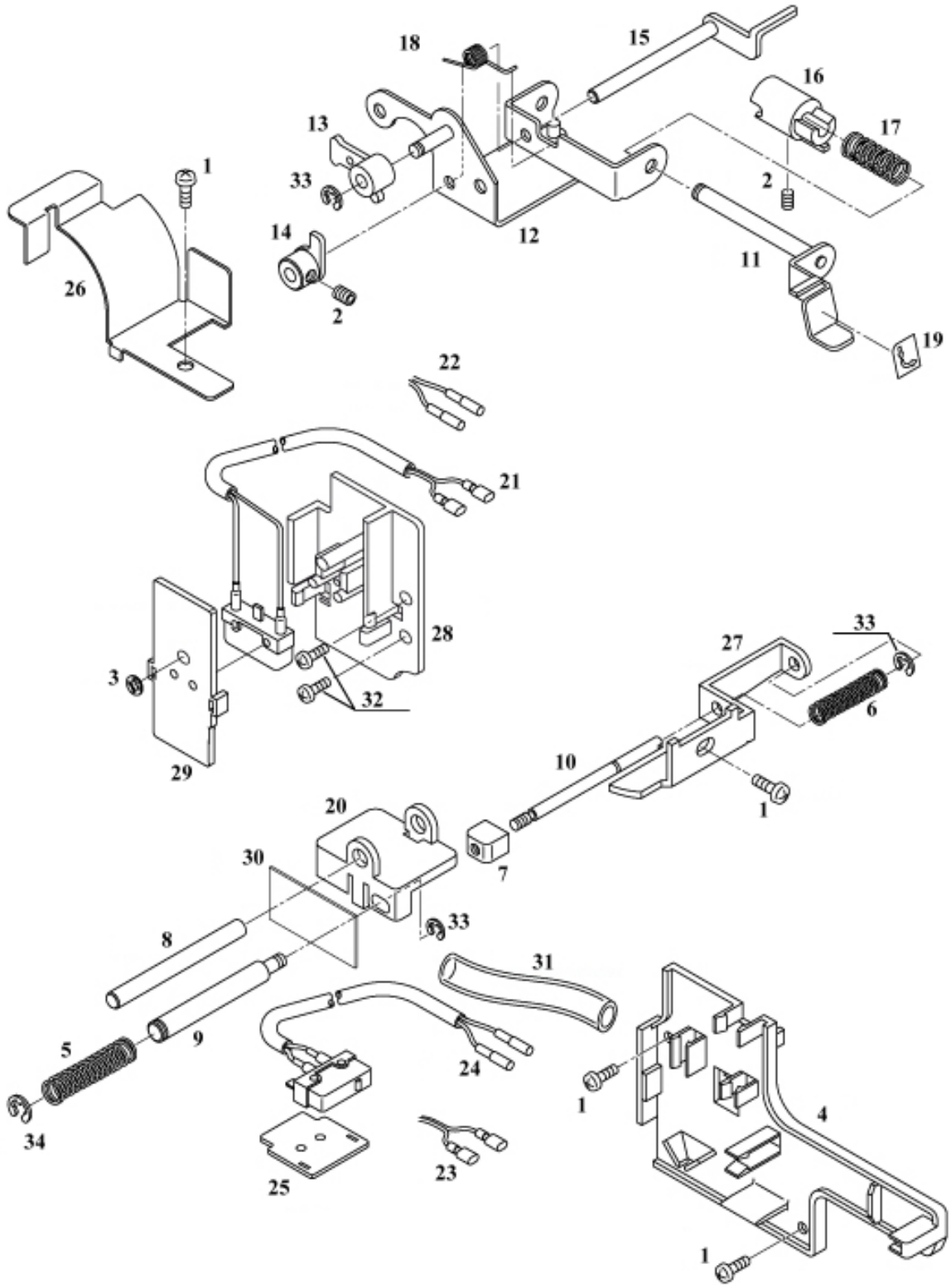
18
15
16
17
13
33
1
2
14
12
11
26
2
19
22
21
28
3
32
29
33
27
6
10
1
20
7
30
33
8
31
5
9
24
1
4
34
25
23
1

# 5

| N° | N° EIC | Description |
|---|---|---|
| 1 | 395052-37 | Screw M4x6 |
| 2 | 395053-63 | Grub screw M4x4 |
| 3 | 396014-86 | #3 CS Nut |
| 4 | 396016-81 | Accessory stand |
| 5 | 396016-82 | Side door switch spring |
| 6 | 396014-66 | Stitch tongue spring |
| 7 | 396016-84 | Micro switch conn. rod |
| 8 | 396016-85 | Slide shaft |
| 9 | 396016-86 | Push pin, A |
| 10 | 396016-87 | Push pin, B |
| 11 | 396016-89 | Safety lever |
| 12 | 396016-90 | Safety lever bracket |
| 13 | 396016-91 | Safety lever cam |
| 14 | 396016-92 | Safety lever |
| 15 | 396016-93 | Safety lever connection |
| 16 | 396016-94 | Safety lever conn. cam |
| 17 | 396016-95 | Cam spring, B |
| 18 | 396016-96 | Spring, C |
| 19 | 396017-00 | Swing mark seal |
| 20 | 396019-40 | Micro switch support base (2) |
| 21 | 396019-43 | Micro switch for safety device (120V) |
| 22 | 396019-44 | Micro switch for safety device (230V) |
| 23 | 396019-45 | Micro switch for front flap (120V) |
| 24 | 396019-46 | Micro switch for front flap (230V) |
| 25 | 396019-56 | Micro switch base cover (2) |
| 26 | 396028-77 | AC cover |
| 27 | 396028-83 | Rod bracket, type 2 |
| 28 | 396028-85 | Micro switch protection cover (1) |
| 29 | 396028-86 | Micro switch protection cover (2) |
| 30 | 396028-87 | Insulation plate for micro switch |
| 31 | 396032-96 | Protection tube (wide) |
| 32 | 395049-39 | Screw M3x5 |
| 33 | 395464-00 | Snap ring #3 |
| 34 | 395466-00 | Snap ring #5 |

# 5A 845

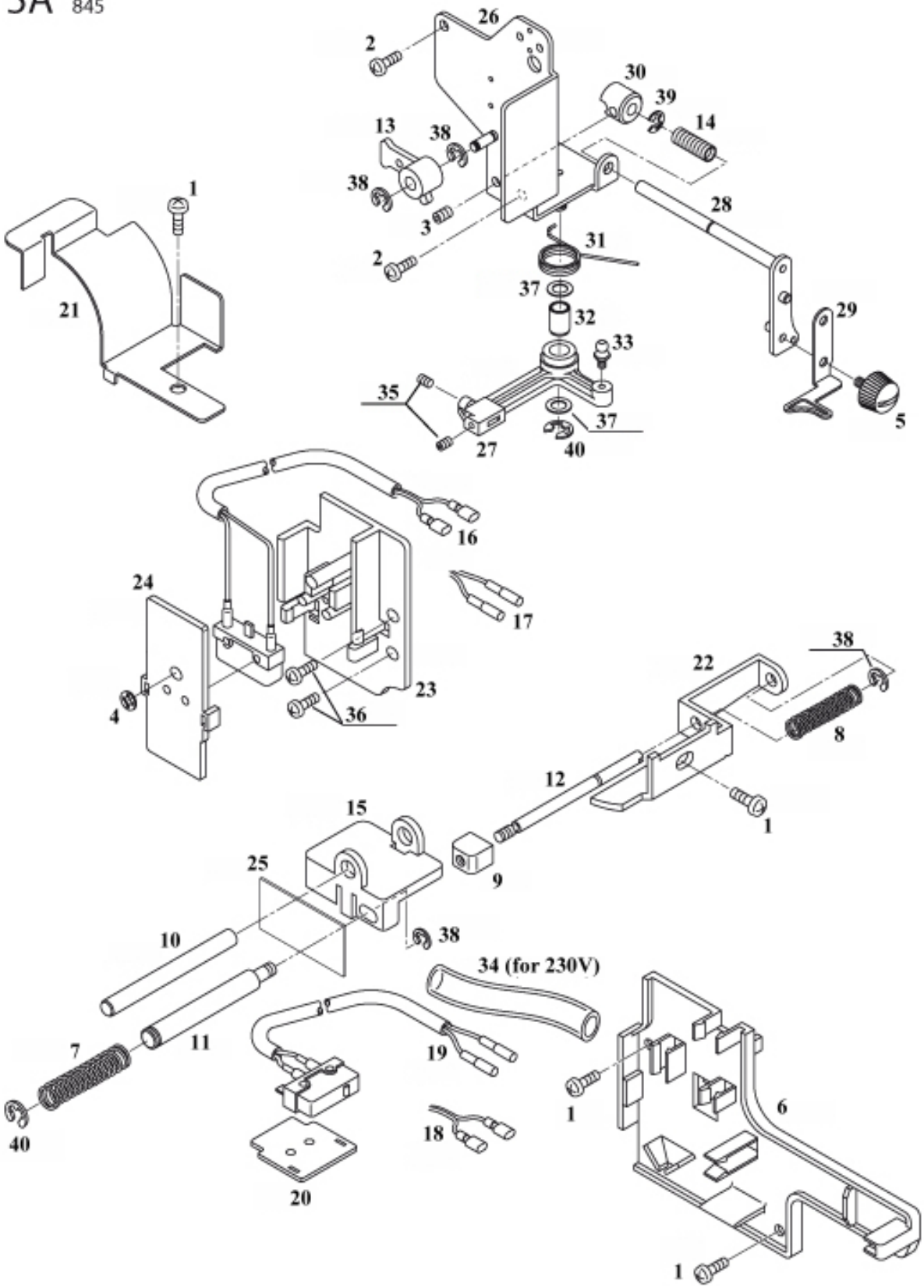
26
2
30
39
14
13
38
38
1
28
3
31
2
37
32
29
21
33
35
37
27
40
5
16
24
17
38
22
23
4
36
8
12
1
15
9
25
38
10
34 (for 230V)
7
11
19
1
6
40
18
20
1

# 5A

| N° | N° EIC | Description |
|---|---|---|
| 1 | 395052-37 | Screw M4x6 |
| 2 | 395052-57 | Screw M4x10 |
| 3 | 395053-63 | Grub screw M4x4 |
| 4 | 396014-86 | #3 CS Nut |
| 5 | 396001-39 | Coin screw |
| 6 | 396016-81 | Accessory stand |
| 7 | 396016-82 | Side door switch spring |
| 8 | 396014-66 | Stitch tongue spring |
| 9 | 396016-84 | Micro switch conn. rod |
| 10 | 396016-85 | Slide shaft |
| 11 | 396016-86 | Push pin, A |
| 12 | 396016-87 | Push pin, B |
| 13 | 396016-91 | Safety lever cam |
| 14 | 396016-95 | Cam spring, B |
| 15 | 396019-40 | Micro switch support base (2) |
| 16 | 396019-43 | Micro switch for safety device (120V) |
| 17 | 396019-44 | Micro switch for safety device (230V) |
| 18 | 396019-45 | Micro switch for front flap (120V) |
| 19 | 396019-46 | Micro switch for front flap (230V) |
| 20 | 396019-56 | Micro switch base cover (2) |
| 21 | 396028-77 | AC cover |
| 22 | 396028-83 | Rod bracket, type 2 |
| 23 | 396028-85 | Micro switch protection cover (1) |
| 24 | 396028-86 | Micro switch protection cover (2) |
| 25 | 396028-87 | Insulation plate for micro switch |
| 26 | 396032-72 | Reflex partition plate |
| 27 | 396032-75 | Top cover hook lever |
| 28 | 396032-76 | Triangle thread guide lever |
| 29 | 396032-77 | Triangle thread guide |
| 30 | 396032-79 | Top cover guide cam |
| 31 | 396032-81 | Round thread guide |
| 32 | 396032-83 | Bearing 6x11 |
| 33 | 396032-87 | Pillow ball 5mm |
| 34 | 396032-96 | Protection tube (wide) |
| 35 | 396032-98 | Grub screw M3x6 |
| 36 | 395049-39 | Screw M3x5 |
| 37 | 395462-00 | Polyslider thrust washer 9.5x6.2x0.5 |
| 38 | 395464-00 | Snap ring #3 |
| 39 | 395465-00 | Snap ring #4 |
| 40 | 395466-00 | Snap ring #5 |

# 6 745/845

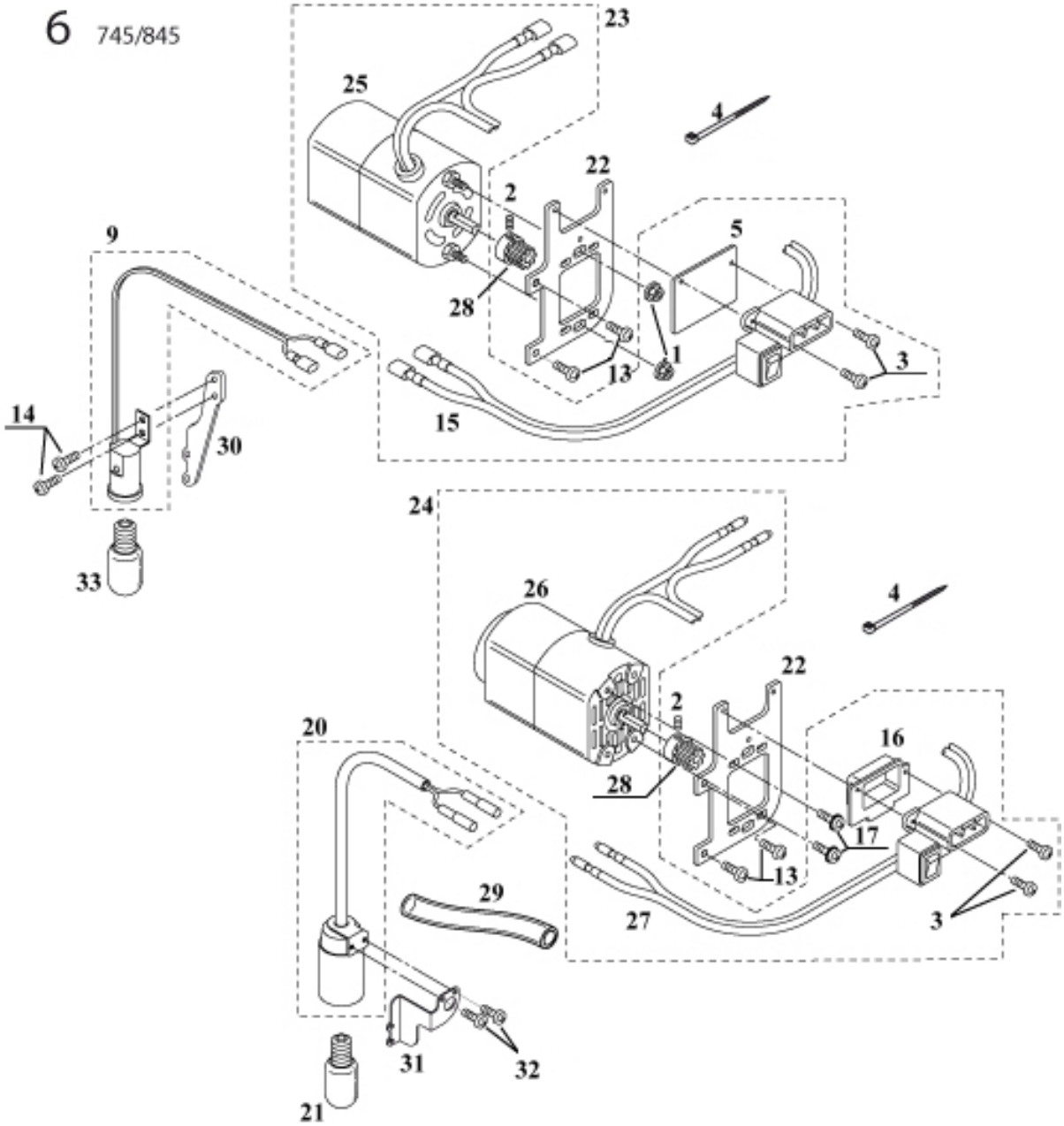
23
25
4
22
2
5
9
28
1
13
3
14
15
30
33
24
26
4
22
2
20
16
28
17
13
29
27
3
31
32
21

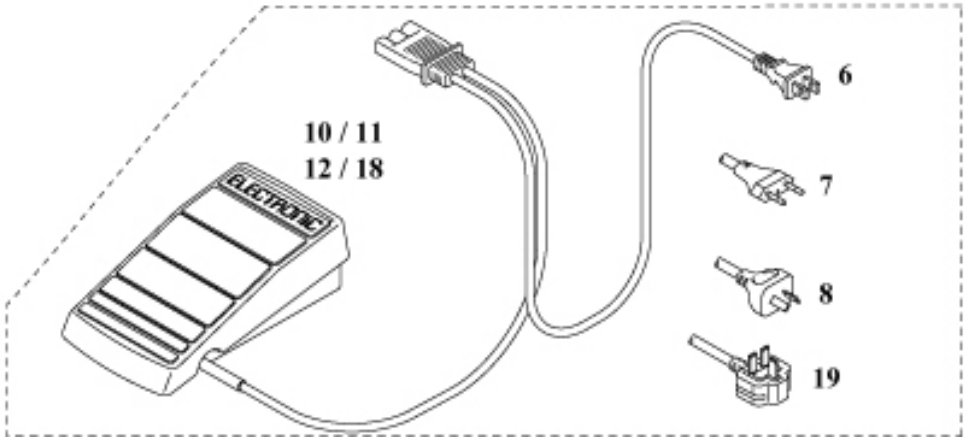
6
10 / 11
12 / 18
ELECTRONIC
7
8
19

# 6

| N° | N° EIC | Description |
|---|---|---|
| 1 | 395049-20 | Motor set nut M4 |
| 2 | 395053-63 | Grub screw M4x4 |
| 3 | 396004-75 | Screw M3x8 |
| 4 | 396029-51 | Fastening band |
| 5 | 396008-53 | Insulation plate |
| 6 | 396008-22 | Cord set CSA 115V |
| 7 | 396008-24 | Cord set CEE 220V type O |
| 8 | 396008-25 | Cord set SAA/NZ 240V |
| 9 | 396011-29 | Lamp set 120V E-12 |
| 10 | 396011-43 | Foot cont. 4C-335G CEE type A |
| 11 | 396011-45 | Foot cont.4C-335G SAA/NZ type I |
| 12 | 396011-46 | Foot cont.4C-335B CSA |
| 13 | 396011-48 | Tapping screw M4x10S |
| 14 | 396014-52 | Screw |
| 15 | 396011-78 | Wired TB/SW set 115V |
| 16 | 396011-79 | Condenser cover 230-240V |
| 17 | 396029-54 | Nut, M4x10 |
| 18 | 396018-79 | Foot controller for UK (E-1) |
| 19 | 396032-69 | cord set, GB |
| 20 | 396018-68 | Lamp cord set (220-240V) |
| 21 | 396013-55 | Light bulb (220-240V) |
| 22 | 396019-64 | Motor bracket (DE) |
| 23 | 396019-65 | Motor set 120V |
| 24 | 396019-66 | Motor set 230V |
| 25 | 396019-67 | Motor (DE) 3M-952J 115V |
| 26 | 396019-68 | Motor (DE) 4M-807K 240V |
| 27 | 396019-69 | Wired TE/SW set 220-240V |
| 28 | 396019-70 | Motor pulley |
| 29 | 396029-68 | Protection tube, 230V |
| 30 | 396032-57 | Light bulb support (110V) |
| 31 | 396032-60 | Light bulb support (230V) |
| 32 | 395049-39 | Screw M3x5 |
| 33 | 396013-56 | Light bulb 120V |

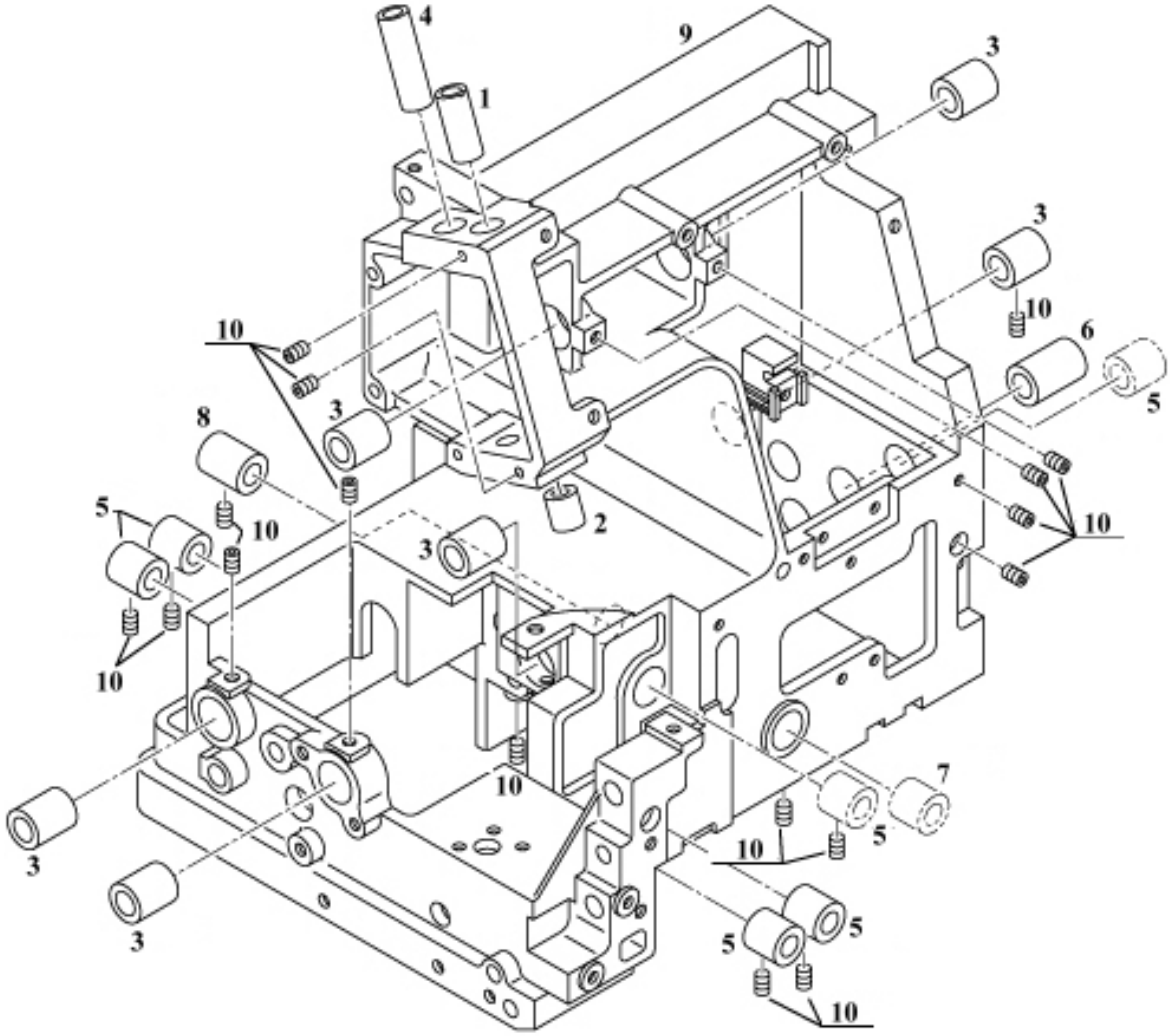
4
9
3
1
3
10
10
6
5
8
3
5
10
2
10
3
10
10
7
3
5
10
3
5
5
10

# 7

| N° | N° EIC | Description |
|---|---|---|
| 1 | 396003-67 | Upper needle bar bearing |
| 2 | 396003-68 | Lower needle bar bearing |
| 3 | 396009-69 | Bearing |
| 4 | 396009-73 | Presser bar bearing |
| 5 | 396009-90 | Looper axle bearing |
| 6 | 396014-22 | Bearing |
| 7 | 396014-23 | Bearing 7x12 |
| 8 | 396014-24 | Bearing 7x16 |
| 9 | 396032-58 | Casing |
| 10 | 395421-00 | Grub screw M4x5 |

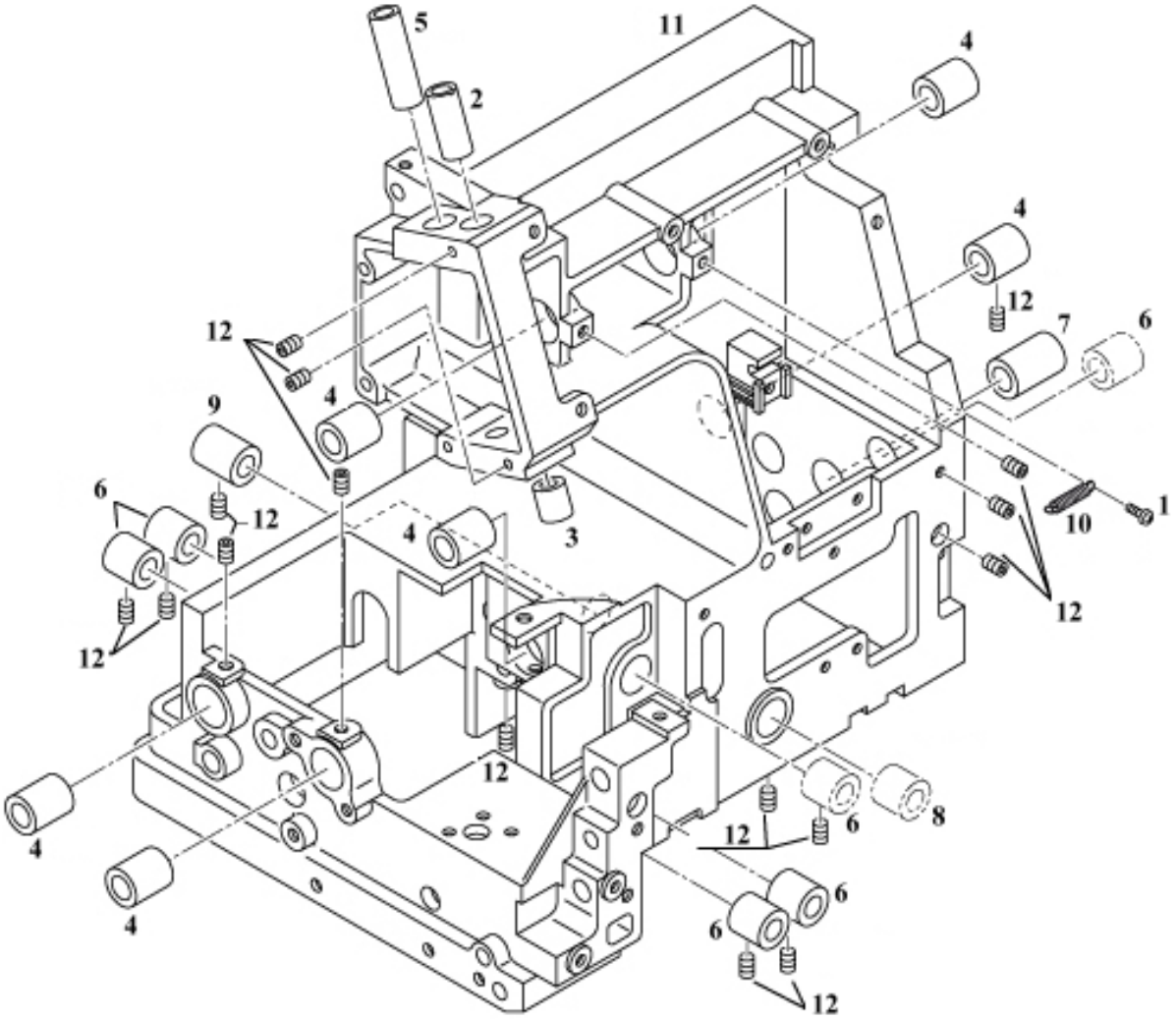
5
11
4
2
4
12
12
7
6
4
9
6
12
4
3
10
1
12
12
12
4
8
12
6
4
6
6
12

# 7A

| N° | N° EIC | Description |
|---|---|---|
| 1 | 395052-18 | Screw M4x8 |
| 2 | 396003-67 | Upper needle bar bearing |
| 3 | 396003-68 | Lower needle bar bearing |
| 4 | 396009-69 | Bearing |
| 5 | 396009-73 | Presser bar bearing |
| 6 | 396009-90 | Looper axle bearing |
| 7 | 396014-22 | Bearing |
| 8 | 396014-23 | Bearing 7x12 |
| 9 | 396014-24 | Bearing 7x16 |
| 10 | 396032-84 | Holding spring |
| 11 | 396032-58 | Casing |
| 12 | 395421-00 | Grub screw M4x5 |

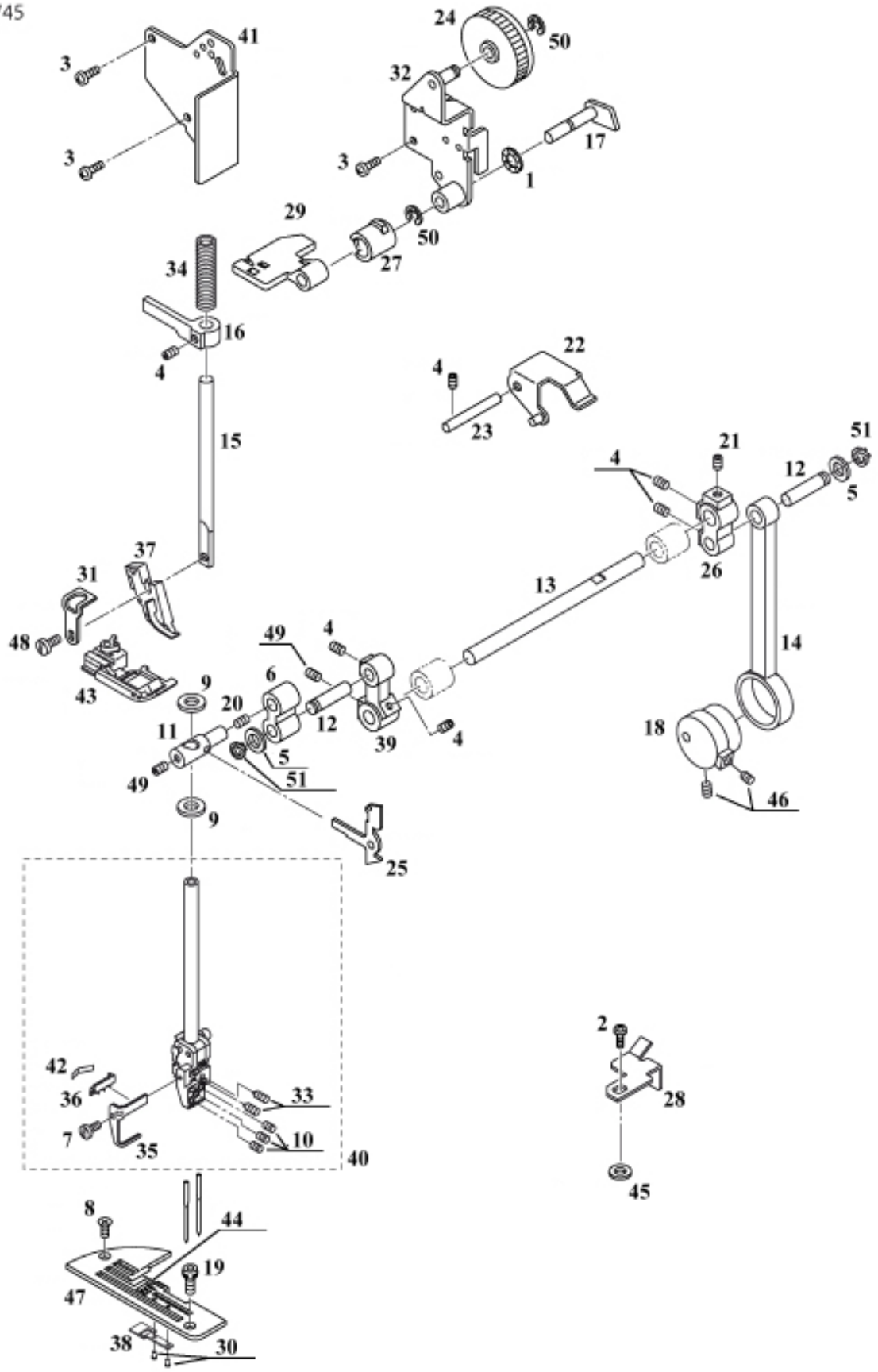
41
3
3
24
50
32
3
17
1
29
50
27
34
16
4
22
4
23
15
21
51
4
12
5
26
37
31
13
48
49
4
14
43
9
6
20
12
39
4
11
5
18
49
51
46
9
25
2
42
36
33
28
7
35
10
40
45
8
44
19
47
38
30

| N° | N° EIC | Description |
|---|---|---|
| 1 | 395047-24 | Friction washer 6x14x0.15 |
| 2 | 395052-18 | Screw M4x8 |
| 3 | 395052-57 | Screw M4x10 |
| 4 | 395053-63 | Grub screw M4x4 |
| 5 | 396003-55 | Washer STW-FT 7x1 |
| 6 | 396003-61 | Needle bar link |
| 7 | 396002-15 | Set screw-type 2 |
| 8 | 396006-76 | Needle plate position screw |
| 9 | 396008-11 | Felt washer 7x13x2 |
| 10 | 396009-23 | Dry lock allen screw M3x3 |
| 11 | 396009-64 | Needle bar stud |
| 12 | 396009-66 | Needle bar link pin |
| 13 | 396009-68 | Upper axle |
| 14 | 396009-71 | Crank rod |
| 15 | 396009-72 | Presser bar |
| 16 | 396009-74 | Presser bar guide |
| 17 | 396009-75 | Presser bar lift crank |
| 18 | 396009-86 | Crank cam |
| 19 | 396010-12 | Needle plate screw |
| 20 | 396011-52 | Grub screw M4x6 |
| 21 | 396011-88 | Allen screw M5x8 flat tip |
| 22 | 396014-54 | Pressure control lever, assem. |
| 23 | 396014-55 | Pressure control axile |
| 24 | 396014-56 | Pressure control dial |
| 25 | 396014-62 | Needle thread take-up lever, assem. |
| 26 | 396014-65 | Needle bar crank, right |
| 27 | 396014-71 | Needle bar presser ft. safety cam sleeve |
| 28 | 396016-15 | CS fixed plate |
| 29 | 396014-76 | "Presser foot lever, assem." |
| 30 | 396026-36 | Needle plate pin |
| 31 | 396014-82 | Needle bar stopper |
| 32 | 396017-04 | Pressure adjustment base holder |
| 33 | 396014-81 | Needle clamp allen screw |
| 34 | 396014-74 | Presser bar spring |
| 35 | 396019-20 | Needle clamp thread guide |
| 36 | 396019-21 | Needle thread support guide |
| 37 | 396019-23 | Presser foot shank |
| 38 | 396026-37 | Needle plate spring |
| 39 | 396019-32 | Crank (L) |
| 40 | 396026-26 | Needle bar assem., complete set |
| 41 | 396019-42 | Reflex partition plate |
| 42 | 396026-24 | Thread guide spring plate |
| 43 | 396013-87 | Presser foot, type 2 |
| 44 | 396026-75 | Needle plate pin |
| 45 | 396029-66 | Washer, 12x4x2 |
| 46 | 396029-69 | Screw M4x6 |
| 47 | 396032-54 | Needle plate |
| 48 | 395402-00 | Screw #7x8 |
| 49 | 395047-98 | Grub screw M5x5 |
| 50 | 395465-00 | Snap ring #4 |

| | | |
|---|---|---|
| 51 | 395128-24 | Clip ring #7 |

# 8A 845

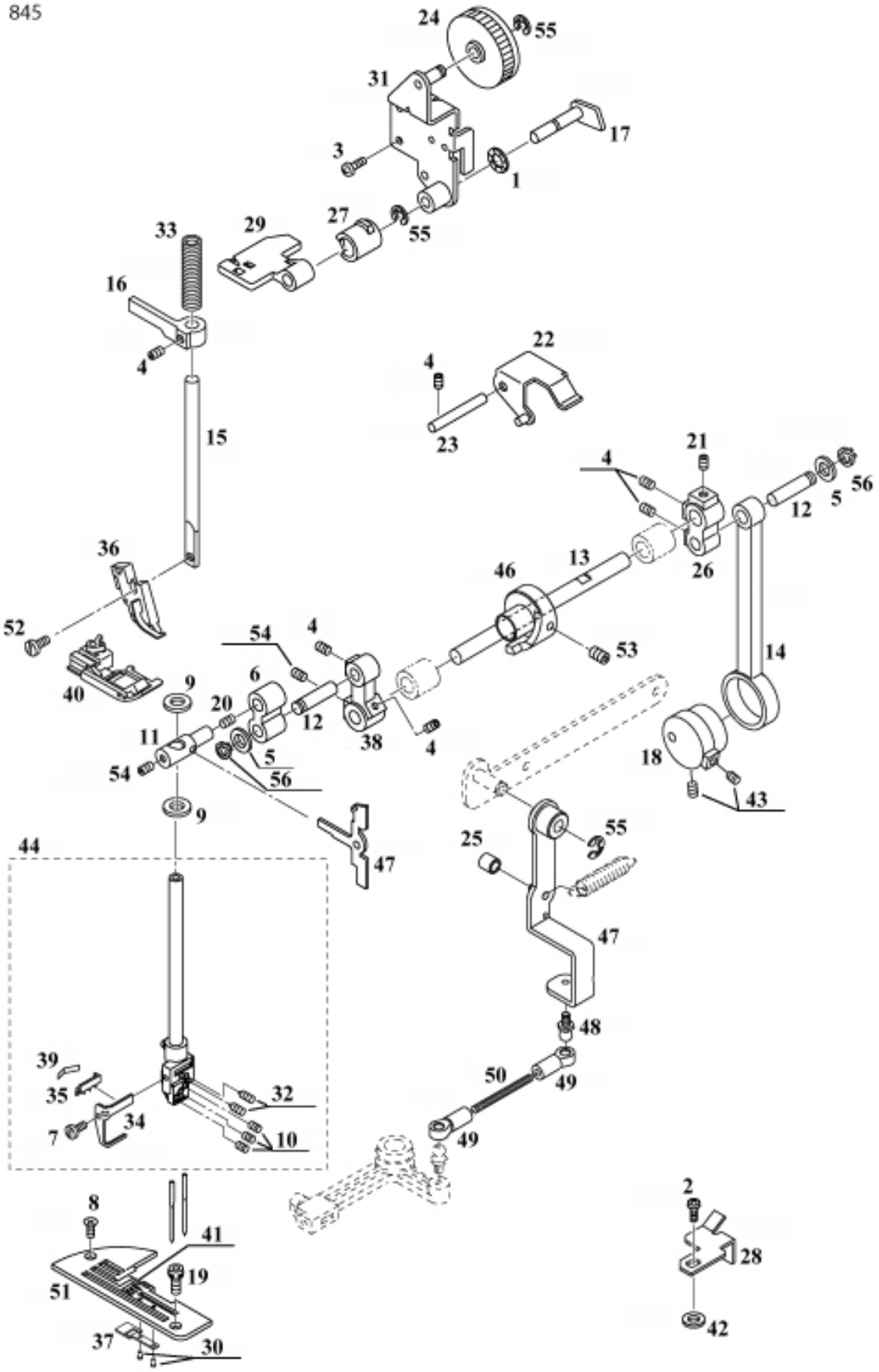
24
55
31
17
3
1
33
29
27
55
16
4
22
4
23
15
21
4
56
5
12
36
13
46
26
52
54
4
53
14
40
9
6
20
12
38
4
11
5
18
54
56
43
9
44
47
25
55
47
48
39
35
32
50
49
7
34
10
49
8
41
2
28
51
19
37
30
42

# 8A

| N° | N° EIC | Description |
|---|---|---|
| 1 | 395047-24 | Friction washer 6x14x0.15 |
| 2 | 395052-18 | Screw M4x8 |
| 3 | 395052-57 | Screw M4x10 |
| 4 | 395053-63 | Grub screw M4x4 |
| 5 | 396003-55 | Washer STW-FT 7x1 |
| 6 | 396003-61 | Needle bar link |
| 7 | 396002-15 | Set screw-type 2 |
| 8 | 396006-76 | Needle plate position screw |
| 9 | 396008-11 | Felt washer 7x13x2 |
| 10 | 396009-23 | Dry lock allen screw M3x3 |
| 11 | 396009-64 | Needle bar stud |
| 12 | 396009-66 | Needle bar link pin |
| 13 | 396009-68 | Upper axle |
| 14 | 396009-71 | Crank rod |
| 15 | 396009-72 | Presser bar |
| 16 | 396009-74 | Presser bar guide |
| 17 | 396009-75 | Presser bar lift crank |
| 18 | 396009-86 | Crank cam |
| 19 | 396010-12 | Needle plate screw |
| 20 | 396011-52 | Grub screw M4x6 |
| 21 | 396011-88 | Allen screw M5x8 flat tip |
| 22 | 396014-54 | Pressure control lever, assem. |
| 23 | 396014-55 | Pressure control axile |
| 24 | 396014-56 | Pressure control dial |
| 25 | 396015-71 | Cam roller |
| 26 | 396014-65 | Needle bar crank, right |
| 27 | 396014-71 | Needle bar presser ft. safety cam sleeve |
| 28 | 396016-15 | CS fixed plate |
| 29 | 396014-76 | "Presser foot lever, assem." |
| 30 | 396026-36 | Needle plate pin |
| 31 | 396017-04 | Pressure adjustment base holder |
| 32 | 396014-81 | Needle clamp allen screw |
| 33 | 396014-74 | Presser bar spring |
| 34 | 396019-20 | Needle clamp thread guide |
| 35 | 396019-21 | Needle thread support guide |
| 36 | 396019-23 | Presser foot shank |
| 37 | 396026-37 | Needle plate spring |
| 38 | 396019-32 | Crank (L) |
| 39 | 396026-24 | Thread guide spring plate |
| 40 | 396013-87 | Presser foot, type 2 |
| 41 | 396026-75 | Needle plate pin |
| 42 | 396029-66 | Washer, 12x4x2 |
| 43 | 396029-69 | Screw M4x6 |
| 44 | 396032-71 | Needle bar assem., complete set |
| 45 | 396032-74 | Arm rod |
| 46 | 396032-82 | Top cover control cam |
| 47 | 396032-86 | Needle thread take-up lever |
| 48 | 396032-87 | Pillow ball 5mm |
| 49 | 396032-88 | Ball joint |
| 50 | 396032-89 | Adjuster rod |

| | | |
|---|---|---|
| 51 | 396032-54 | Needle plate |
| 52 | 395402-00 | Screw #7x8 |
| 53 | 395421-00 | Grub screw M4x5 |
| 54 | 395047-98 | Grub screw M5x5 |
| 55 | 395465-00 | Snap ring #4 |
| 56 | 395128-24 | Clip ring #7 |

# 9 745/845

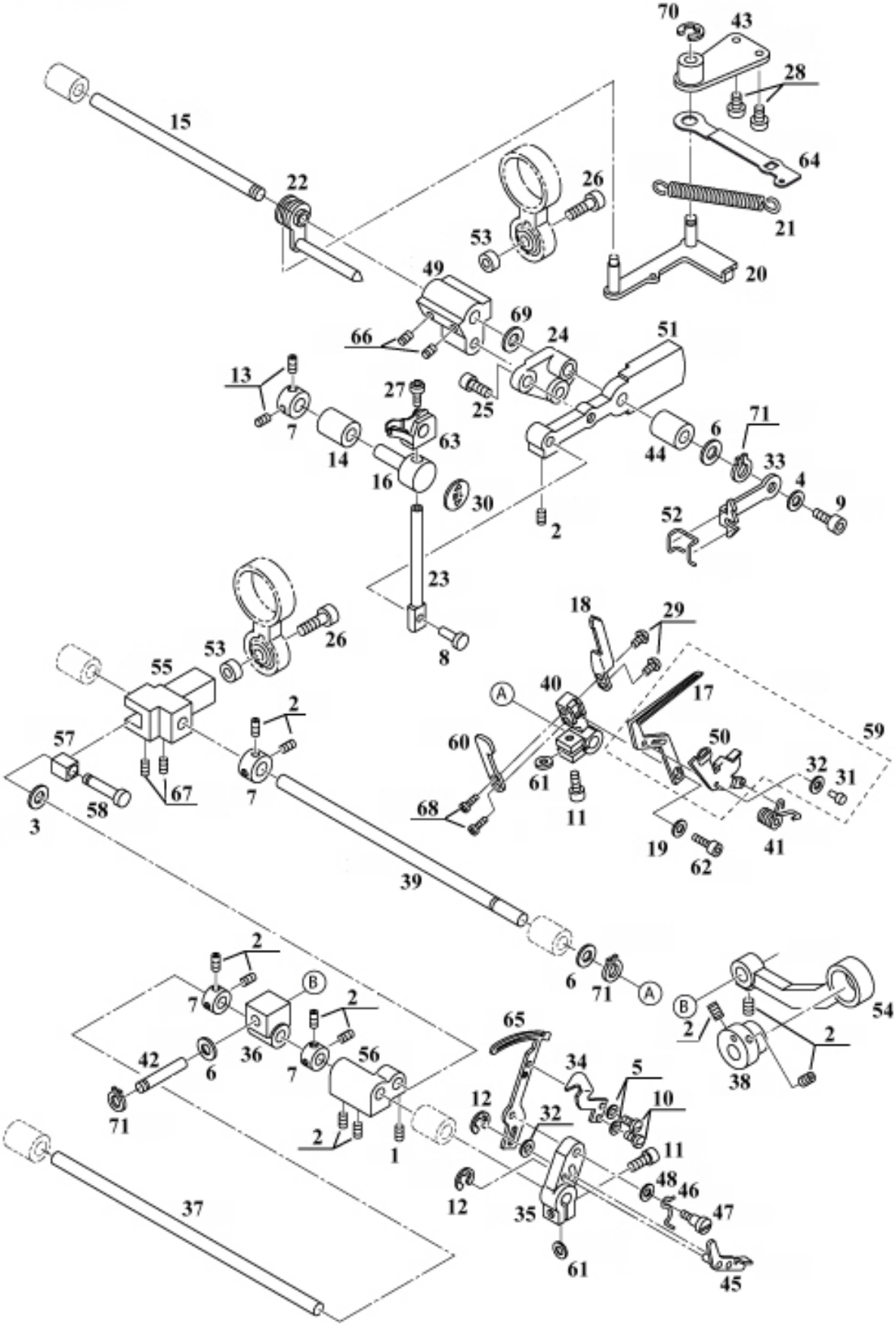
70
43
28
15
64
22
26
21
53
20
49
69
66
24
51
13
27
25
7
63
6
71
14
44
33
16
4
30
9
2
52
23
18
29
26
53
8
55
40
17
2
A
57
60
50
59
32
31
61
67
7
58
11
68
3
19
41
62
39
2
6
71
A
7
B
2
B
54
65
2
2
42
36
7
56
34
5
38
6
12
10
71
32
2
1
11
48
46
12
47
37
35
61
45

# 9

| N° | N° EIC | Description |
|---|---|---|
| 1 | 395053-58 | Grub screw M3x3 |
| 2 | 395053-63 | Grub screw M4x4 |
| 3 | 395053-64 | Washer STW-FT 5x0.5 |
| 4 | 395053-70 | Conical washer 8x4x0.4 |
| 5 | 396003-35 | Washer 3x6x0.2 |
| 6 | 396003-55 | Washer STW-FT 7x1 |
| 7 | 396003-80 | "Collar E""7" |
| 8 | 396003-82 | Upper looper shaft pin |
| 9 | 396004-74 | Allen screw M4x6 |
| 10 | 396002-15 | Set screw-type 2 |
| 11 | 396004-91 | Allen screw M4x12 |
| 12 | 396016-01 | E Ring φ2 |
| 13 | 396008-08 | Grub screw M4x3 |
| 14 | 396009-90 | Looper axle bearing |
| 15 | 396009-93 | Upper looper axle |
| 16 | 396009-96 | Upper looper shaft guide |
| 17 | 396010-00 | Lower looper |
| 18 | 396010-01 | Overlock needle guard |
| 19 | 396008-70 | Conical washer 3x7 |
| 20 | 396010-57 | Looper release crank |
| 21 | 396010-60 | Release lever sprig |
| 22 | 396010-61 | Axle rocker joint pin |
| 23 | 396010-81 | Upper looper shaft |
| 24 | 396016-02 | Upper looper arm (2) |
| 25 | 396011-42 | Allen screw M4x10P |
| 26 | 396011-58 | Allen screw M5x18P |
| 27 | 396011-81 | Allen screw M4x8 Pan |
| 28 | 396011-84 | Tapping screw M4x8 S |
| 29 | 396012-78 | Allen screw M3x6 |
| 30 | 396012-42 | Oil mark round |
| 31 | 396012-55 | Rivet |
| 32 | 396012-58 | Washer 2.7x6.5x0.5 |
| 33 | 396016-03 | Upper looper take up lever |
| 34 | 396016-04 | Chain looper guard |
| 35 | 396016-05 | Chain looper crank |
| 36 | 396016-30 | CS Slider |
| 37 | 396016-07 | Chain looper axle |
| 38 | 396014-08 | Chain stitch eccentric |
| 39 | 396016-08 | Lower looper axle |
| 40 | 396016-09 | Lower looper support |
| 41 | 396016-10 | Lower looper guide spring |
| 42 | 396016-11 | Slider pin |
| 43 | 396016-12 | Upper looper release bracket |
| 44 | 396014-23 | Bearing 7x12 |
| 45 | 396016-13 | CS kick lever |
| 46 | 396016-14 | CS spring |
| 47 | 396016-16 | CS screw |
| 48 | 396016-17 | Wave washer 4.2x8x0.3 |
| 49 | 396016-18 | Upper looper oscilating crank |
| 50 | 396016-20 | Lower looper pivoting thread guide |

| | | |
|---|---|---|
| 51 | 396016-21 | Upper looper arm |
| 52 | 396029-56 | Upper thread guid spring |
| 53 | 396017-58 | Spacer M5x3 |
| 54 | 396019-27 | Chain looper rod |
| 55 | 396019-28 | Lower looper oscilating crank |
| 56 | 396019-29 | Chain looper rocker |
| 57 | 396019-30 | Chain looper rocker cube |
| 58 | 396019-31 | Slider pin |
| 59 | 396016-29 | Lower looper assem. |
| 60 | 396026-28 | Lower looper support |
| 61 | 396029-58 | Washer |
| 62 | 396026-03 | M3x8 Button bolt |
| 63 | 396029-87 | Upper looper with 2-thread converter |
| 64 | 396032-08 | Upper looper release lever |
| 65 | 396032-30 | Chain looper |
| 66 | 395047-98 | Grub screw M5x5 |
| 67 | 395047-99 | Flat screw M5x5 |
| 68 | 395049-39 | Screw M3x5 |
| 69 | 395128-00 | Washer  STW-FT 7X0.5 |
| 70 | 395465-00 | Snap ring #4 |
| 71 | 395128-24 | Clip ring #7 |

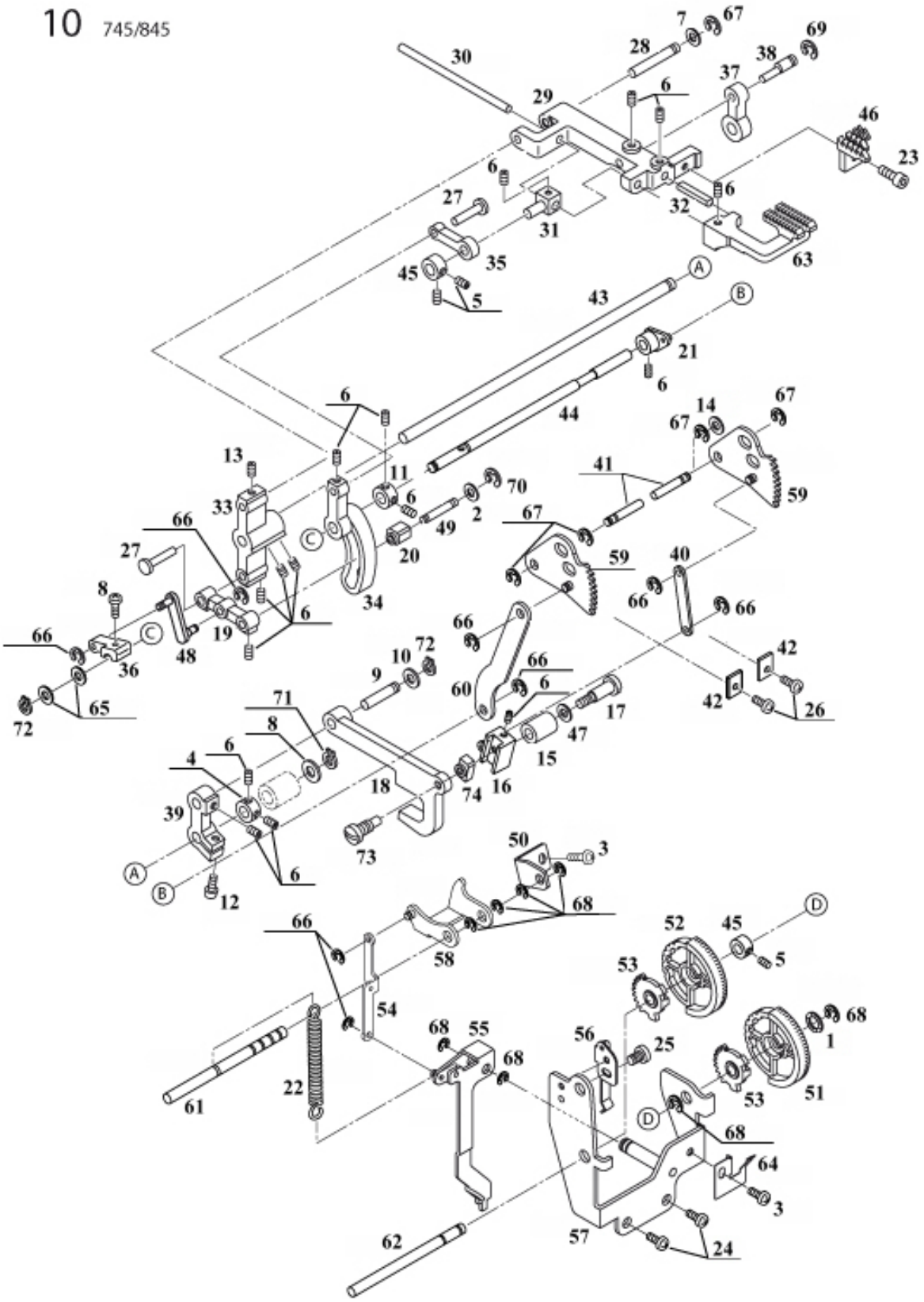
30
28
7
67
69
38
37
29
6
46
23
6
27
31
32
6
35
45
5
63
43
A
B
21
6
44
6
14
67
67
13
11
41
70
33
6
2
59
66
49
67
27
20
59
40
8
34
66
66
6
19
48
66
66
36
10
72
42
9
60
66
6
42
26
71
17
65
72
8
47
6
15
4
18
74
16
39
73
50
3
A
6
B
12
68
66
52
45
D
58
5
53
54
68
55
56
25
68
1
68
22
53
51
61
D
68
64
3
62
57
24

# 10

| N° | N° EIC | Description |
|---|---|---|
| 1 | 395047-24 | Friction washer 6x14x0.15 |
| 2 | 395052-14 | Washer 9x4x0.8 |
| 3 | 395052-37 | Screw M4x6 |
| 4 | 395053-23 | Lower shaft collar |
| 5 | 395053-58 | Grub screw M3x3 |
| 6 | 395053-63 | Grub screw M4x4 |
| 7 | 395053-64 | Washer STW-FT 5x0.5 |
| 8 | 395053-65 | Washer STW-FM 8x1 |
| 9 | 396003-54 | Needle bar rod pin |
| 10 | 396003-55 | Washer STW-FT 7x1 |
| 11 | 396003-80 | "Collar E""7" |
| 12 | 396004-91 | Allen screw M4x12 |
| 13 | 396008-08 | Grub screw M4x3 |
| 14 | 396029-52 | Washer 5x10x0.25 |
| 15 | 396009-90 | Looper axle bearing |
| 16 | 396010-19 | Feed regulator |
| 17 | 396010-20 | Feed regulator hinge pin |
| 18 | 396010-21 | Feed forked rod |
| 19 | 396010-29 | DF regulator rod |
| 20 | 396010-30 | DF regulator slide block |
| 21 | 396010-32 | DF axle arm |
| 22 | 396010-60 | Release lever sprig |
| 23 | 396011-42 | Allen screw M4x10P |
| 24 | 396011-48 | Tapping screw M4x10 S |
| 25 | 396014-52 | Screw |
| 26 | 396011-84 | Tapping screw M4x8 S |
| 27 | 396012-92 | Link pin |
| 28 | 396015-72 | "Feed bar conn. pin, back" |
| 29 | 396015-75 | Feed bar |
| 30 | 396015-76 | Feed bar axle |
| 31 | 396015-77 | Feed bar rod |
| 32 | 396015-78 | Guide pin |
| 33 | 396015-79 | Feed rock lever, left |
| 34 | 396015-99 | "Feed rock lever, back" |
| 35 | 396016-00 | Feed rock conn. rod. |
| 36 | 396015-82 | D.F. axle arm |
| 37 | 396014-12 | Feed eccentric |
| 38 | 396015-85 | Feed dog conn. pin |
| 39 | 396015-86 | Feed dog lever back |
| 40 | 396015-88 | S.L. lever conn. rod |
| 41 | 396015-92 | S.L. lever pin |
| 42 | 396015-93 | S.L. plate |
| 43 | 396015-95 | Feed rock axle |
| 44 | 396015-96 | D.F. axle |
| 45 | 396014-41 | Collar #6 |
| 46 | 396019-24 | Main feed dog |
| 47 | 396029-70 | Spring washer 7x13x0.3 |
| 48 | 396029-79 | DF  connection rod |
| 49 | 396029-80 | DF regulator slide pin |
| 50 | 396029-90 | Follower axis support |

| | | |
|---|---|---|
| 51 | 396029-91 | S.L. Dial |
| 52 | 396029-92 | D.F. Dial |
| 53 | 396029-93 | S.L./D.F. Dial gear |
| 54 | 396029-95 | Upper looper shifting connector |
| 55 | 396029-96 | Upper looper shifting lever |
| 56 | 396032-02 | DF notch spring plate |
| 57 | 396032-03 | Dial support |
| 58 | 396032-06 | Looper follower |
| 59 | 396032-13 | Gear shifting lever |
| 60 | 396032-14 | DF connection rod (R) |
| 61 | 396032-24 | Follower axle |
| 62 | 396032-25 | S.L./D.F. dial axle |
| 63 | 396032-27 | Differential feed dog |
| 64 | 396032-94 | Stopper spring plate |
| 65 | 395128-00 | Washer STW-FT 7X0.5 |
| 66 | 395464-00 | Snap ring #3 |
| 67 | 395465-00 | Snap ring #4 |
| 68 | 395466-00 | Snap ring #5 |
| 69 | 395467-00 | Snap ring #6 |
| 70 | 395401-02 | E ring #2.5 |
| 71 | 395128-23 | Clip ring #8 |
| 72 | 395128-24 | Clip ring #7 |
| 73 | 395054-29 | Feed S.B. hinge screw |
| 74 | 395054-30 | Feed slide block |

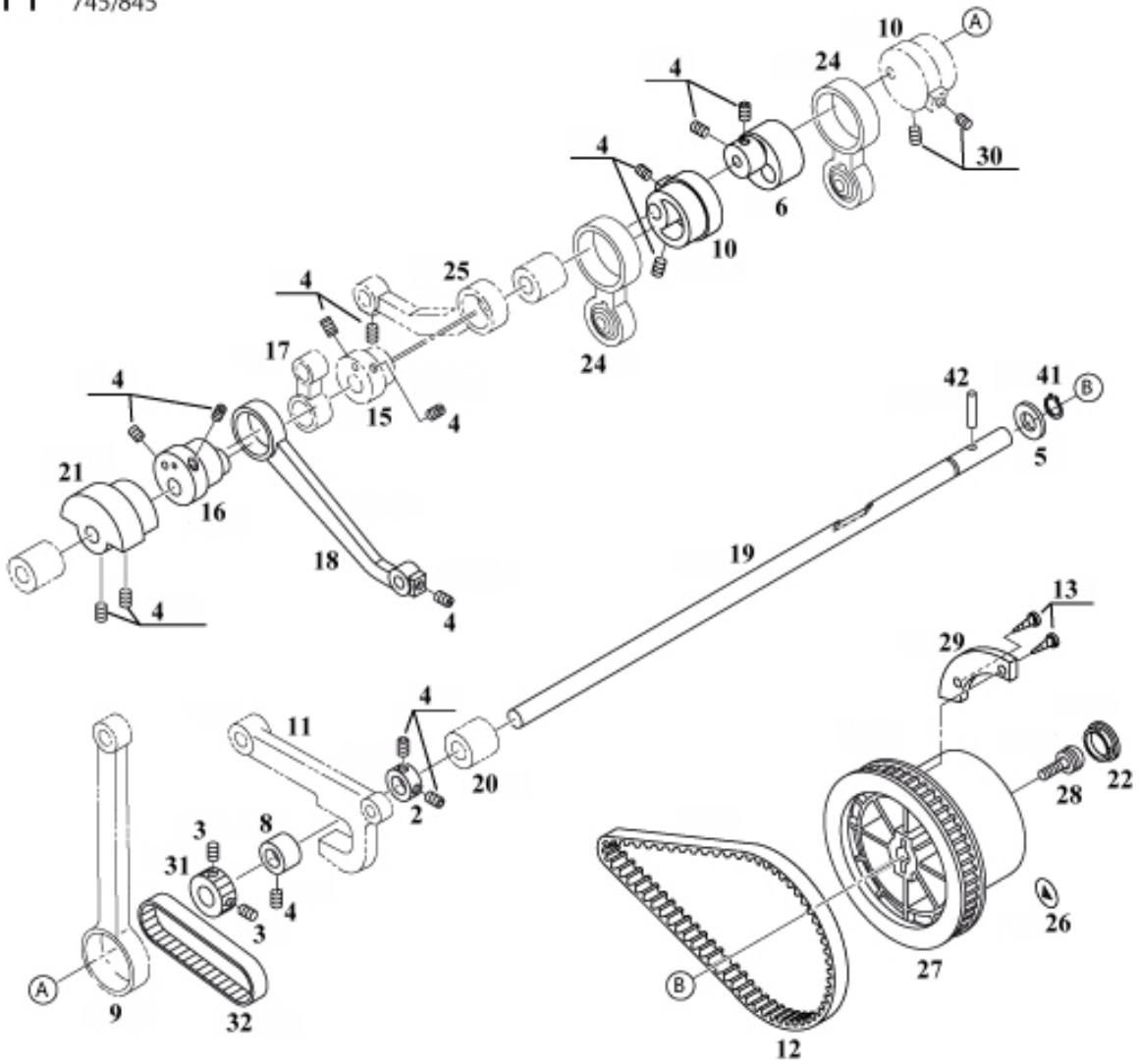
10
A
24
4
30
6
10
25
17
15
21
16
18
42
41
B
5
19
13
29
11
20
2
28
22
3
8
31
26
27
9
32
12

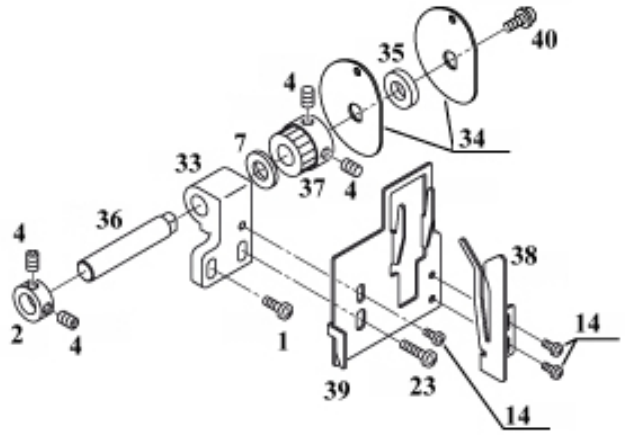
40
35
4
34
7
33
37
36
38
2
1
14
39
23

# 11

| N° | N° EIC | Description |
|---|---|---|
| 1 | 395052-57 | Screw M4x10 |
| 2 | 395053-23 | Lower shaft collar |
| 3 | 395053-58 | Grub screw M3x3 |
| 4 | 395053-63 | Grub screw M4x4 |
| 5 | 395053-65 | Washer STW-FM 8x1 |
| 6 | 396003-47 | Looper rod eccentric |
| 7 | 396029-50 | Washer 8x0.5 |
| 8 | 396007-62 | Feed cam |
| 9 | 396009-71 | Crank rod |
| 10 | 396009-86 | Crank cam |
| 11 | 396010-21 | Feed forked rod |
| 12 | 396010-46 | Belt XL136 |
| 13 | 396011-39 | Tapping screw M3x8.5 |
| 14 | 396014-52 | Screw |
| 15 | 396014-08 | Chain stitch eccentric |
| 16 | 396014-11 | Cutter cam |
| 17 | 396014-12 | Feed eccentric |
| 18 | 396014-13 | Cutter conn. rod |
| 19 | 396014-16 | Main shaft |
| 20 | 396014-22 | Bearing |
| 21 | 396014-17 | Main balance weight, left |
| 22 | 396014-18 | Handwheel cap |
| 23 | 396014-19 | Screw M4x16 pan head |
| 24 | 396014-20 | Ball rod assem. |
| 25 | 396019-27 | Chain looper rod |
| 26 | 396019-02 | Position mark |
| 27 | 396026-49 | Flywheel, type 2 |
| 28 | 396029-61 | Screw M4x20SWW |
| 29 | 396029-67 | Handwheel weight balancer |
| 30 | 396029-69 | Screw M4x6 |
| 31 | 396029-72 | Chain looper thread take-up pulley, (1) |
| 32 | 396029-73 | Belt, M2x73 |
| 33 | 396029-74 | Pulley support |
| 34 | 396029-75 | Chain looper thread take-up rotary cam |
| 35 | 396029-76 | Washer, 7x14x28 |
| 36 | 396029-77 | Rotary cam shaft |
| 37 | 396029-78 | Chain looper thread take-up pulley, (2) |
| 38 | 396029-99 | Chain looper thread holder |
| 39 | 396032-00 | Chain looper thread guide plate |
| 40 | 395430-00 | Screw TPM 4x8 |
| 41 | 395128-23 | Clip ring #8 |
| 42 | 395054-44 | Roll pin 3x16 |

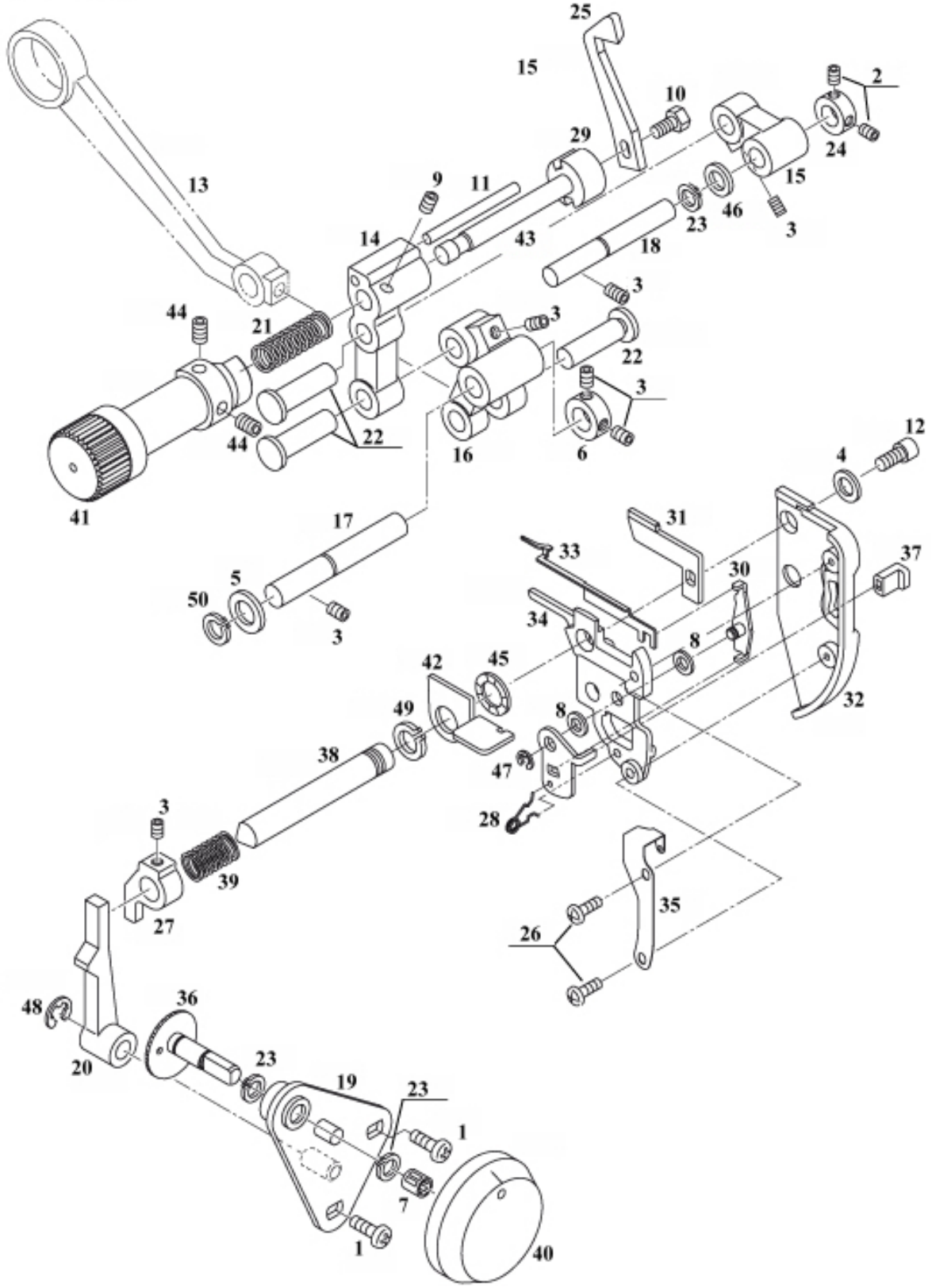
25
15
2
10
29
24
13
9
11
15
23
46
3
14
43
18
3
44
21
3
22
3
44
22
16
6
12
4
41
17
31
33
37
5
30
50
34
8
3
42
45
32
49
8
38
47
3
28
39
35
27
26
48
36
20
23
19
23
1
7
1
40

# 12

| N° | N° EIC | Description |
|---|---|---|
| 1 | 395052-57 | Screw M4x10 |
| 2 | 395053-58 | Grub screw M3x3 |
| 3 | 395053-63 | Grub screw M4x4 |
| 4 | 395053-70 | Conical washer 8x4x0.4 |
| 5 | 396003-55 | Washer STW-FT 7x1 |
| 6 | 396003-80 | "Collar E""7" |
| 7 | 395054-50 | Knob spring |
| 8 | 396029-52 | Washer 5x10x0.25 |
| 9 | 396009-23 | Dry lock allen screw M3x3 |
| 10 | 396012-14 | Hexagon bolt M4X10 |
| 11 | 396012-31 | Pin M3x38 |
| 12 | 396012-47 | Allen screw M4x10 |
| 13 | 396014-13 | Cutter conn. rod |
| 14 | 396014-25 | Moving blade support rod |
| 15 | 396014-26 | Cutter arm (1) |
| 16 | 396014-27 | Cutter arm (2) |
| 17 | 396014-28 | Cutter arm axle (1) |
| 18 | 396014-29 | Cutter arm axle (2) |
| 19 | 396014-30 | Cutting width dial stand |
| 20 | 396014-31 | Cutting width dial lever |
| 21 | 396014-36 | Moving blade pressure spring |
| 22 | 396014-38 | Pin |
| 23 | 396014-39 | C ring #6 |
| 24 | 396014-41 | Collar #6 |
| 25 | 396001-60 | Moving blade |
| 26 | 396029-55 | TP screw 3x10 |
| 27 | 396018-31 | Moving blade shift rod |
| 28 | 396019-95 | DT release spring |
| 29 | 396029-88 | Moving blade holder |
| 30 | 396029-94 | Rolled hem device control plaate |
| 31 | 396032-04 | Fixed blade |
| 32 | 396032-05 | Protection cover |
| 33 | 396032-09 | Rolled hem device |
| 34 | 396032-10 | Fixed blade suppor holder |
| 35 | 396032-12 | Back tack plate |
| 36 | 396032-21 | Cutting width dial cam |
| 37 | 396032-28 | Lever cap |
| 38 | 396032-50 | Fixed blade axle |
| 39 | 396032-51 | Fixed blade pressure spring |
| 40 | 396032-52 | Cutting width dial |
| 41 | 396032-53 | Cutter knob |
| 42 | 396032-61 | Needle plate lifter |
| 43 | 396032-95 | Moving blade axle |
| 44 | 395421-00 | Grub screw M4x5 |
| 45 | 396012-26 | Friction washer 13x8x0.2 |
| 46 | 395462-00 | Polyslider thrust washer 9.5x6.2x0.5 |
| 47 | 395465-00 | Snap ring #4 |
| 48 | 395466-00 | Snap ring #5 |
| 49 | 395128-23 | Clip ring #8 |
| 50 | 395128-24 | Clip ring #7 |

# 13 745/845

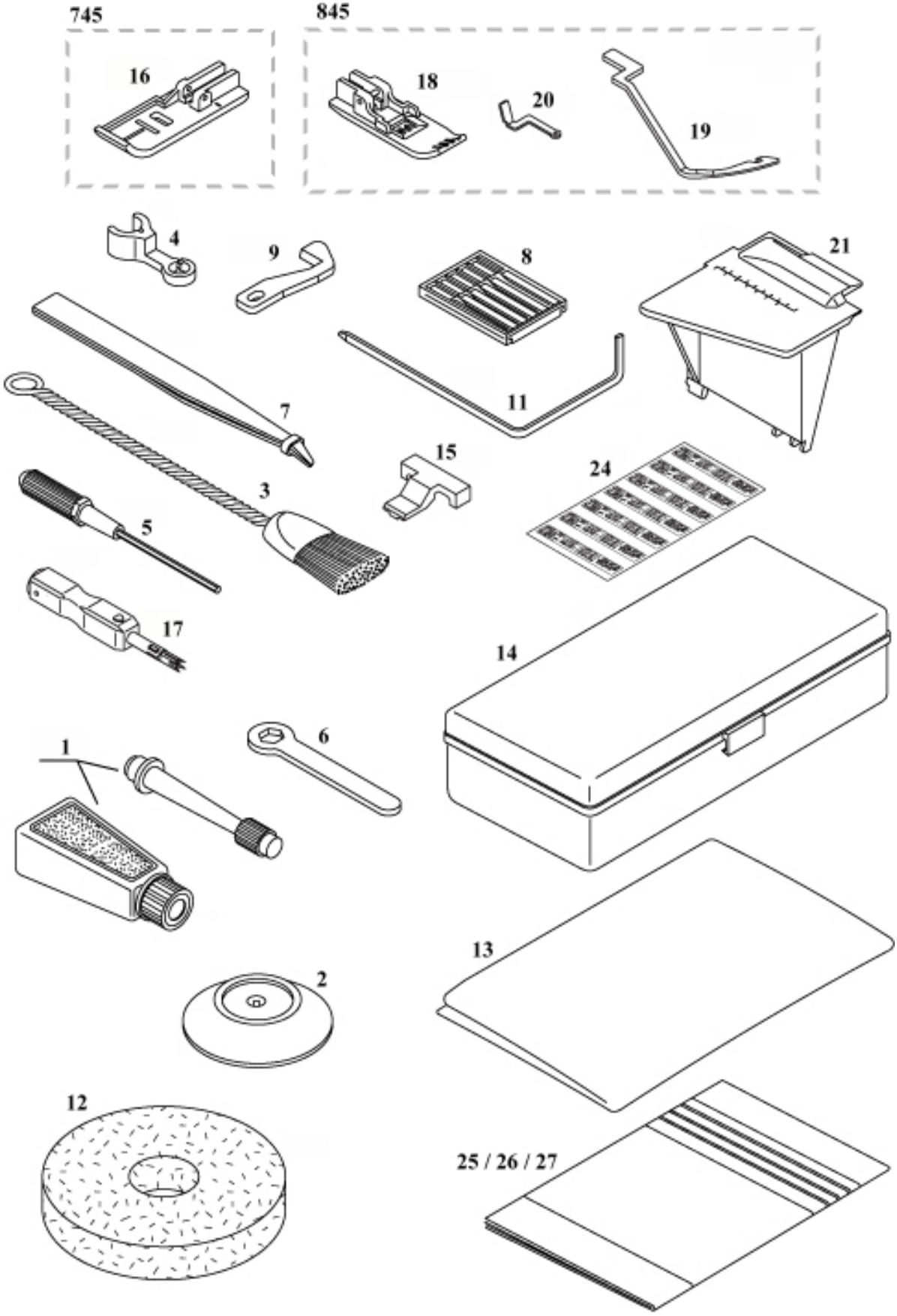

| N° | N° EIC | Description |
|---|---|---|
| 1 | 395049-43 | Oiler |
| 2 | 396002-07 | Spool cap |
| 3 | 396002-12 | Brush |
| 4 | 396006-36 | Aux. thread guide |
| 5 | 396002-69 | Allen screw driver 1.5mm |
| 6 | 396001-13 | Wrench 7mm |
| 7 | 396001-62 | Tweezers |
| 8 | 396001-51 | Needle assortment ELx705 #80-90 |
| 9 | 396001-60 | Moving blade |
| 10 | 396017-01 | Styrofoam (not shown) |
| 11 | 396001-61 | Quilting guide |
| 12 | 396001-64 | Foam pad |
| 13 | 396001-67 | Dust cover, DCX |
| 14 | 396001-68 | Accessory case |
| 15 | 396001-63 | Pre-tension release clip |
| 16 | 396013-75 | Chain stitch foot (F) |
| 17 | 396031-00 | Needle threader |
| 18 | 396032-70 | Top cover foot (R) |
| 19 | 396032-78 | Top Cover hook (spreader) |
| 20 | 396032-80 | Round thread guide |
| 21 | 396031-01 | Chainstitch sewing table |
| 22 | 396031-02 | Carton box for Elna 745 (not shown) |
| 23 | 396031-03 | Carton box for Necchi 745 (not shown) |
| 24 | 396031-04 | Multi-language program display sticker |
| 25 | 396162-62 | Instruction manual 745, Eng/Fre/Ger/Ita |
| 26 | 396162-64 | Instruction manual 745, Eng/Fre/Spa/Dut |
| 27 | 396162-67 | Instruction manual 745, Necchi |
| 28 | 396001-10 | Timing gauge, 745 (not shown) |